PLAN VIEW
FRAME AND COVER
SCALE: 1" = 1'–0"

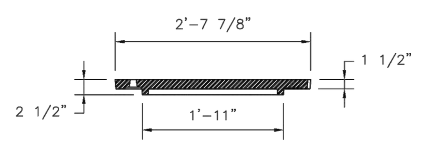

COVER SECTION A–A
SCALE: 1" = 1'–0"

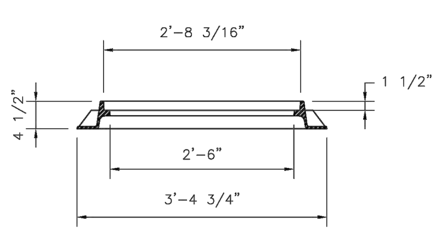

FRAME SECTION A–A
SCALE: 1" = 1'–0"

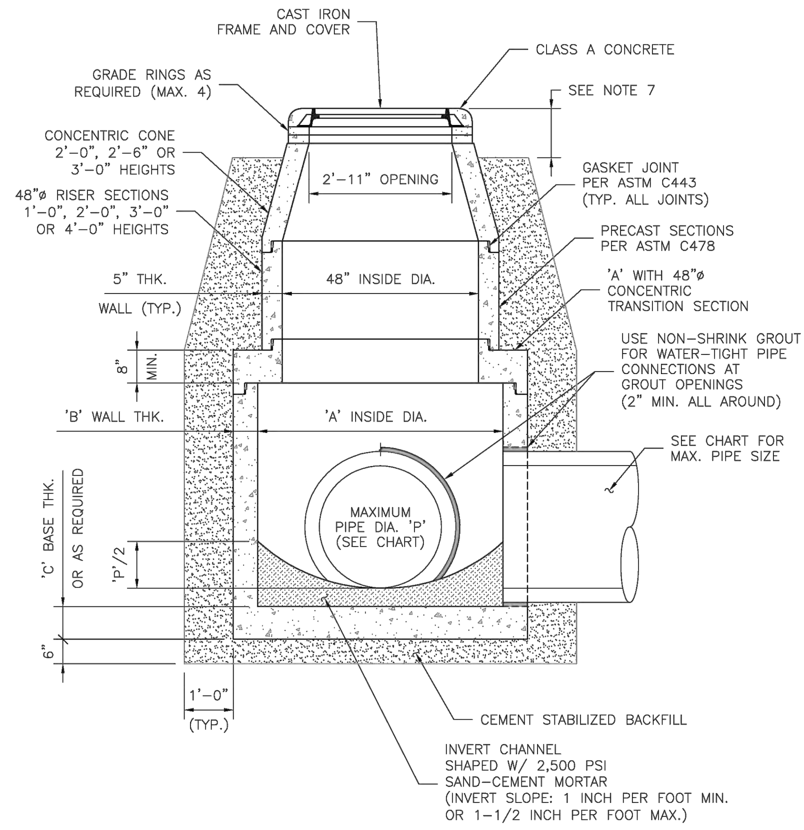

PRECAST CONCENTRIC MANHOLE
FOR PIPE SIZES GREATER THAN 24"
SCALE: 1" = 1'–6"

MAXIMUM PIPE DIA. 'P'	INSIDE DIA. 'A'	MIN. WALL THICKNESS 'B'	MIN. BASE THICKNESS 'C'
30"	60"	6"	8"
42"	72"	7"	8"
54"	84"	8"	10"
60"	96"	9"	10"

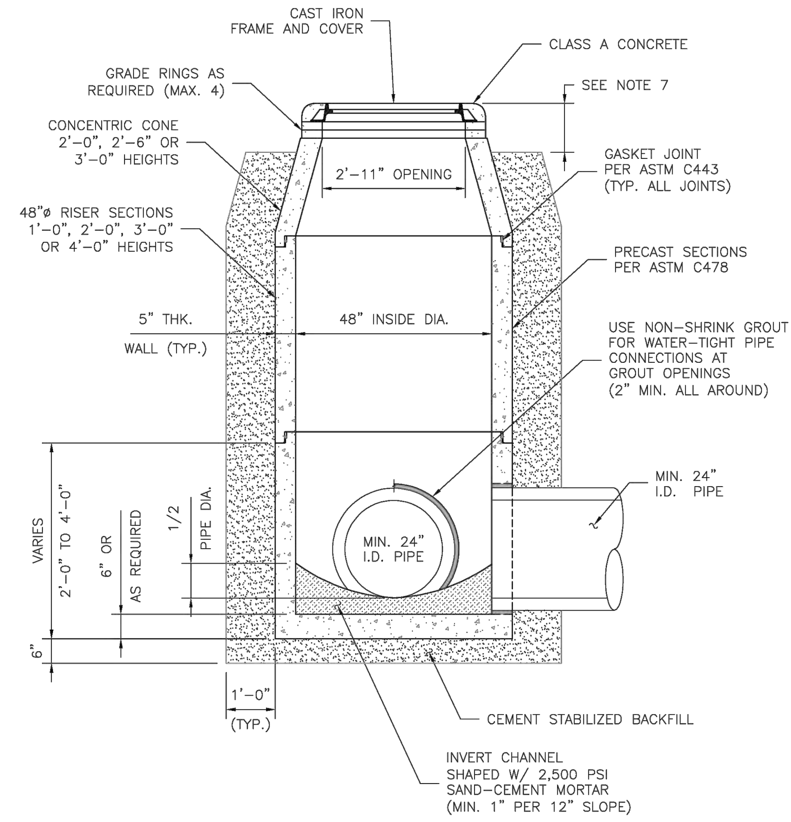

48"ø PRECAST CONCENTRIC MANHOLE
FOR PIPE SIZES 24" OR SMALLER
SCALE: 1" = 1'–6"

GENERAL NOTES:

1. CONSTRUCTION AND MATERIALS SHALL MEET REQUIREMENTS OF ITEM 465 "CONCRETE MANHOLES AND JUNCTION BOXES."
2. CONCRETE FOR MANHOLE: MINIMUM 4,000 PSI IN 28 DAYS
3. HL–93 LOADING; MANHOLE DESIGN SHALL MEET OR EXCEED ASTM C478 REQUIREMENTS.
4. GASKET JOINT: PER ASTM C443
5. FRAME AND COVER SHALL BE EAST JORDAN IRON WORKS MODEL V–1420 OR APPROVED EQUAL.
6. SHOP DRAWINGS WITH MANUFACTURER'S CERTIFICATION SHALL BE SUBMITTED FOR ENGINEER'S APPROVAL.
7. CEMENT STABILIZED BACKFILL SHALL EXTEND TO THE BOTTOM OF PAVEMENT OR 12 INCHES BELOW THE SURFACE IF MANHOLE IS LOCATED IN AN UNPAVED AREA.

NO.	REVISIONS	DATE	NAME

HARRIS COUNTY
ENGINEERING DEPARTMENT

FOR INTERIM REVIEW ONLY
DOCUMENT INCOMPLETE: NOT INTENDED FOR CONSTRUCTION, BIDDING, OR PERMIT PURPOSES
ENGINEER: NAME
P.E. SERIAL No. NUMBER
DATE: / /

PROJECT TITLE:
SHEET DESCRIPTION: PRECAST CIRCULAR CONCRETE MANHOLE DETAILS
CIVIL STANDARD: PMH
DRAWN BY: JDZ
DATE: 10/10/23
CK'D BY: PDG
SCALE: AS NOTED
SHEET NO:

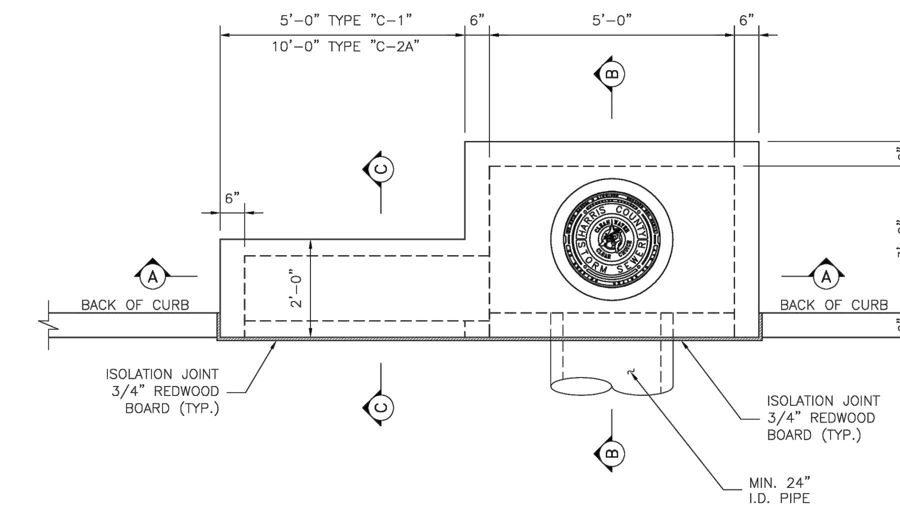

PLAN VIEW

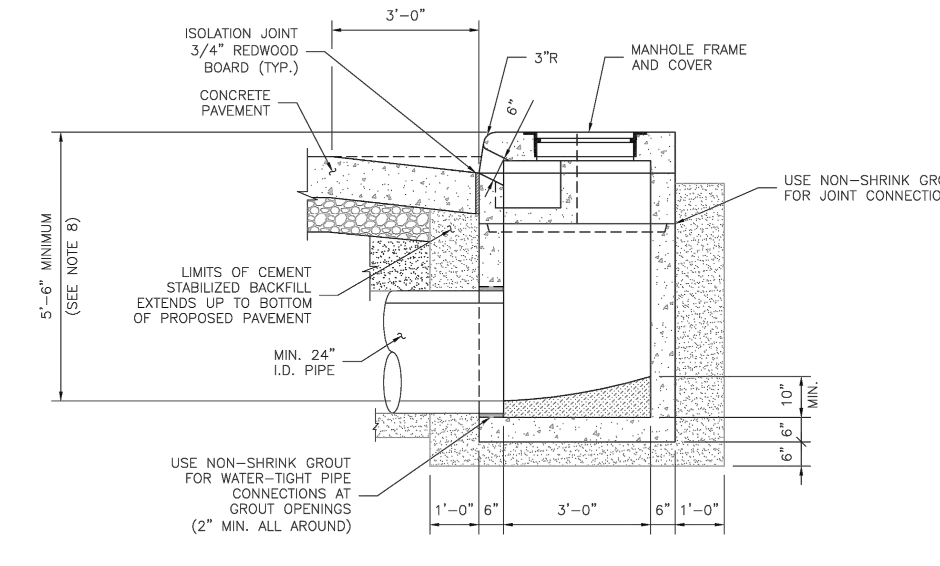

SECTION B–B

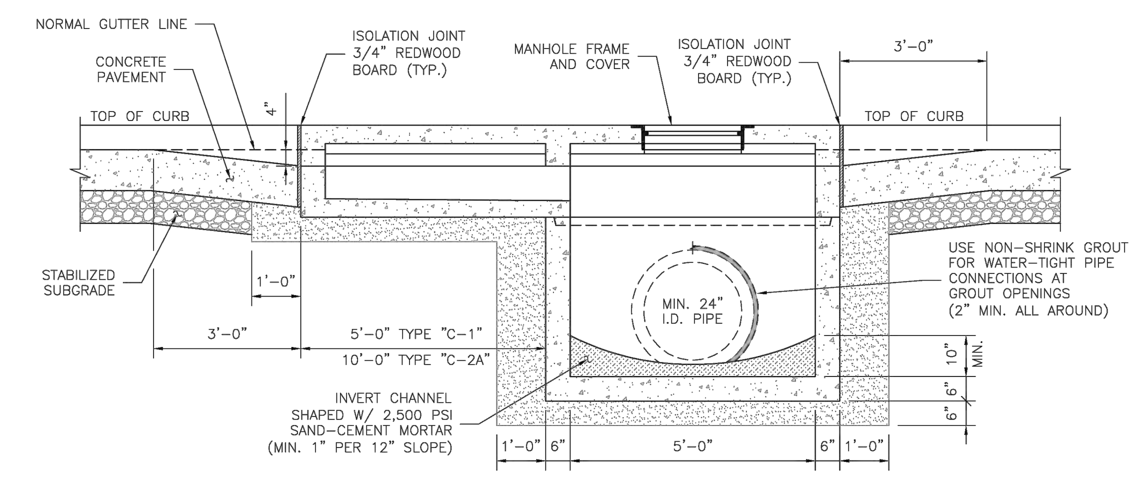

SECTION A–A INLET

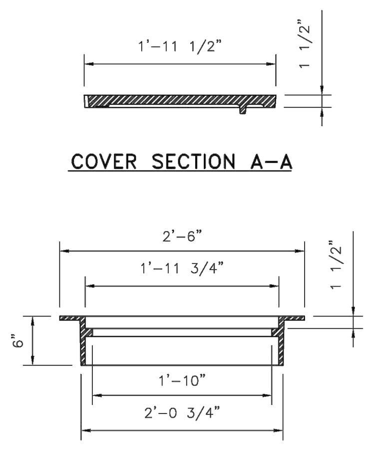

COVER SECTION A–A

FRAME SECTION A–A

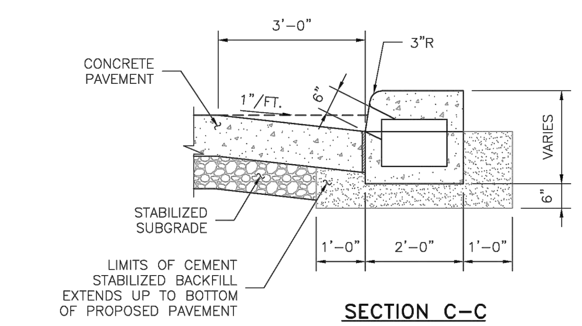

SECTION C–C

INLET NOTES:

TYPE "C": INLET ONLY – NO EXTENSION
TYPE "C–1": INLET WITH ONE EXTENSION (5'–0" LONG)
TYPE "C–2": INLET WITH ONE EXTENSION (5'–0" LONG) ON EACH SIDE
TYPE "C–2A": INLET WITH ONE DOUBLE EXTENSION (10'–0" LONG) ON ONE SIDE
* FOR TYPE "C–2A" INLETS, PROVIDE A CENTER 6"x6" COLUMN IN THE CURB LINE BETWEEN ALL EXTENSIONS.

GENERAL NOTES:

1. CONSTRUCTION AND MATERIALS SHALL MEET REQUIREMENTS OF ITEM 466 "INLETS".
2. CONCRETE FOR INLET: MINIMUM 4,000 PSI IN 28 DAYS
3. PRECAST INLET DESIGN SHALL MEET OR EXCEED ASTM C913 REQUIREMENTS.
4. FRAME AND COVER SHALL BE EAST JORDAN IRON WORKS MODEL V–1814 FRAME AND V–1418 COVER OR APPROVED EQUAL.
5. IF THE ENGINEER OF RECORD SPECIFIES A CAST–IN–PLACE INLET, HE/SHE SHALL INCORPORATE A DETAILED DRAWING INTO THE CONTRACT DOCUMENTS. HOWEVER, IF THE CONTRACTOR ELECTS TO CONSTRUCT A CAST–IN–PLACE INLET, THE CONTRACTOR WILL BE RESPONSIBLE FOR PROVIDING A DETAILED DRAWING, SIGNED AND SEALED BY A REGISTERED PROFESSIONAL ENGINEER LICENSED TO PRACTICE IN THE STATE OF TEXAS.
6. SHOP DRAWINGS WILL BE REQUIRED FOR THE PRECAST SECTION OF INLET.
7. KNOCK–OUTS ARE NOT PERMISSIBLE FOR THE PRECAST SECTION OF INLET.
8. 5'–6" MINIMUM OR AS SPECIFIED BY THE ENGINEER OF RECORD.

NO.	REVISIONS	DATE	NAME

HARRIS COUNTY
ENGINEERING DEPARTMENT

FOR INTERIM REVIEW ONLY
DOCUMENT INCOMPLETE: NOT INTENDED FOR CONSTRUCTION, BIDDING, OR PERMIT PURPOSES
ENGINEER: NAME
P.E. SERIAL No. NUMBER
DATE: / /

PROJECT TITLE:
SHEET DESCRIPTION: MONOLITHIC TYPE "C", "C–1", "C–2", AND "C–2A" INLET DETAILS
CIVIL STANDARD: INL–C
DRAWN BY: JDZ
DATE: 10/10/23
CK'D BY: PDG
SCALE: 1" = 1'–6"
SHEET NO:

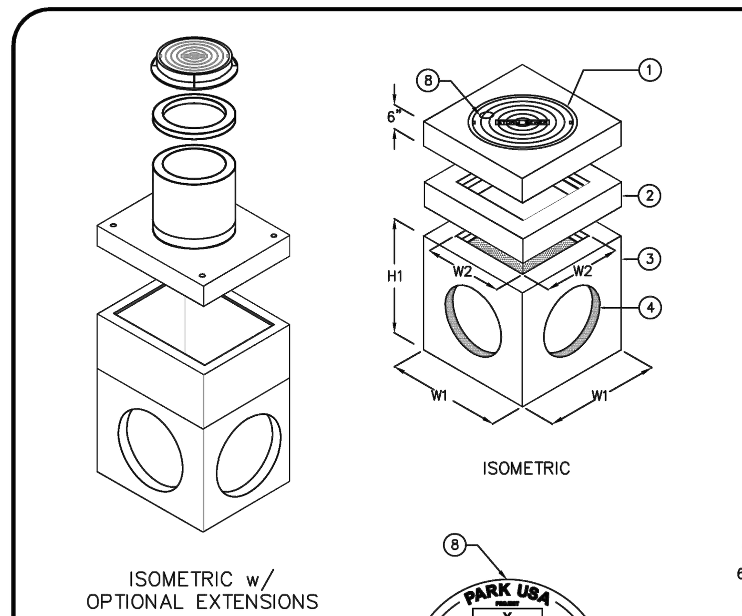

KEYED NOTES		
MARK	QTY	DESCRIPTION
1	1	CAST IRON FRAME & COVER, FURNISHED LOOSE OR CAST–IN. SQUARE PLATE OPTIONAL.
2	1	OPTIONAL EXTENSION 6" OR 12"
3	1	PRECAST CONCRETE BASIN SECTION
4	4	THIN WALL KNOCKOUT ON ALL 4 SIDES, SEE KO DIMENSION FOR MAXIMUM PIPE O.D.
5	1	RAM–NEK GASKET
6	1	(OPTIONAL) CABLE BRACKET FOR FLOAT SWITCH
7	1	(OPTIONAL) LEVEL FLOAT SWITCH FOR PUMP SHUT–DOWN @ DITCH HIGH LEVEL
8	1	NAMEPLATE INDICATING: MFG: PARKUSA 888–611–PARK WWW.PARKUSA.COM MODEL: JBC–1 DATE MANUFACTURED

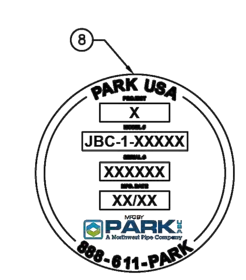

NAME PLATE

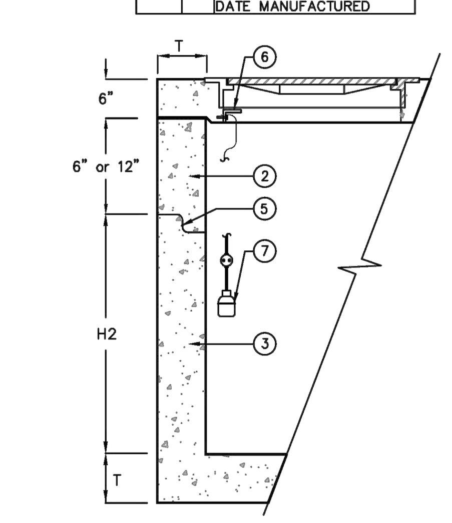

PARTIAL SECTION

MODEL	W1	W2	H1	H2	T	KO	GRATE SIZE	OPEN AREA	WEIGHT LBS
JBC–12	15"	10"	21"	18"	3"	10"	12"x12"x1"	90	180
JBC–14	20"	12"	28"	24"	4"	12"	14"x14"x1½"	120	600
JBC–18	24"	16"	34"	30"	4"	15"	18"x18"x1½"	168	1,000
JBC–20	26"	18"	34"	30"	4"	17"	20"x20"x1½"	170	1,335
JBC–24	32"	22"	41"	36"	5"	22"	24"x24"x2"	268	2,245
JBC–27	37"	25"	42"	36"	6"	24"	27"x27"x2"	350	2,875
JBC–30	42"	30"	42"	36"	6"	30"	32"x32"x2"	490	3,675
JBC–36	48"	36"	42"	36"	6"	32"	38"x38"x2"	693	4,585
JBC–48	60"	48"	54"	48"	6"	48"	38"x38"x2"	693	7,250
JBC–60	72"	60"	66"	60"	6"	60"	38"x38"x2"	693	10,500
*JBC–72	84"	72"	78"	72"	6"	72"	38"x38"x2"	693	15,350
*JBC–84	96"	84"	78"	72"	6"	72"	38"x38"x2"	693	19,500

*THIN WALL KNOCKOUTS NOT AVAILABLE

NPCA CERTIFIED PLANT   ASTM C–913   MEMBER ASPE

SPECIFICATIONS

CONCRETE: CLASS I/II CONCRETE WITH OF DESIGN STRENGTH OF 4500 PSI AT 28 DAYS. UNIT IS OF MONOLITHIC CONSTRUCTION AT FLOOR AND FIRST STAGE OF WALL WITH SECTIONAL RISER TO REQUIRED DEPTH.

REINFORCEMENT: GRADE 60 REINFORCED. STEEL REBAR CONFORMING TO ASTM A615 ON REQUIRED CENTERS OR EQUAL.

C.I. CASTINGS: CAST IRON FRAMES AND GRATES ARE MANUFACTURED OF GREY CAST IRON CONFORMING TO ASTM A48–76 CLASS 30.

© ParkUSA. ALL RIGHTS RESERVED.

PLOTTED ON 12/15/2023 3:46 PM

PARK USA
A Northwest Pipe Company

JUNCTION BOX
MODEL JBC 12" THRU 84"

PM	PC	DRN	ENG	DWG. NO.	REV.
.	.	.	.	JBC–1	A
DATE 2023					

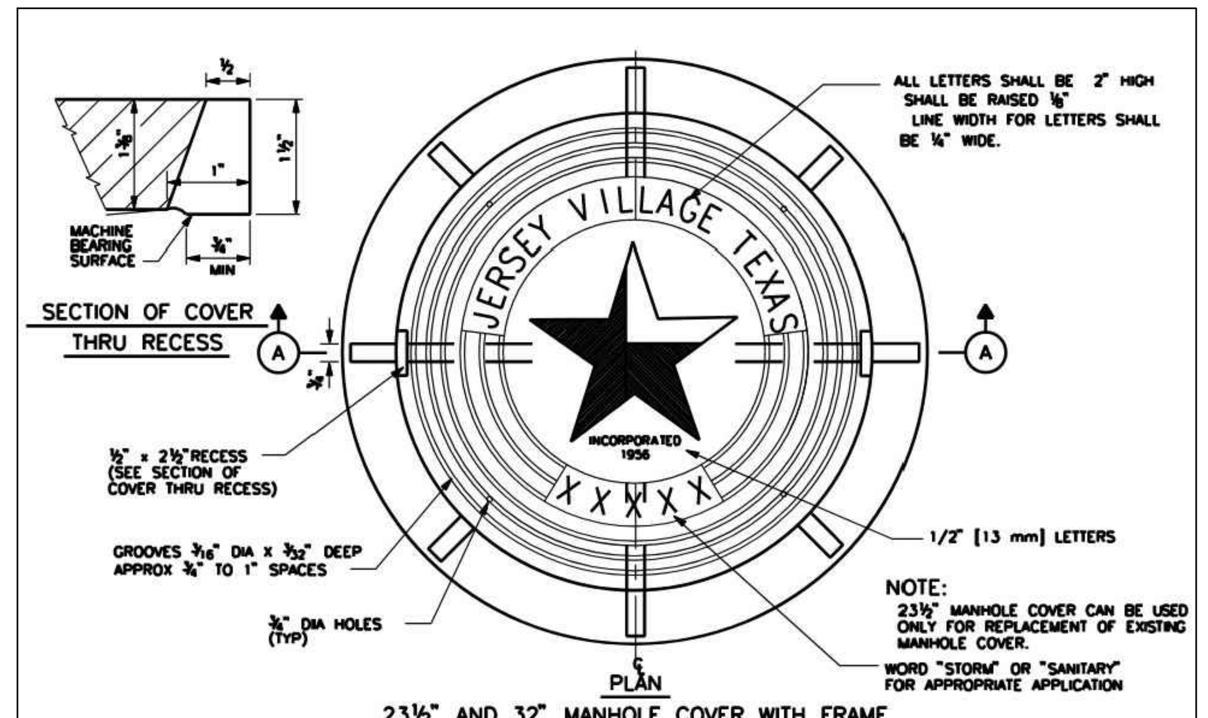

PLAN
23½" AND 32" MANHOLE COVER WITH FRAME

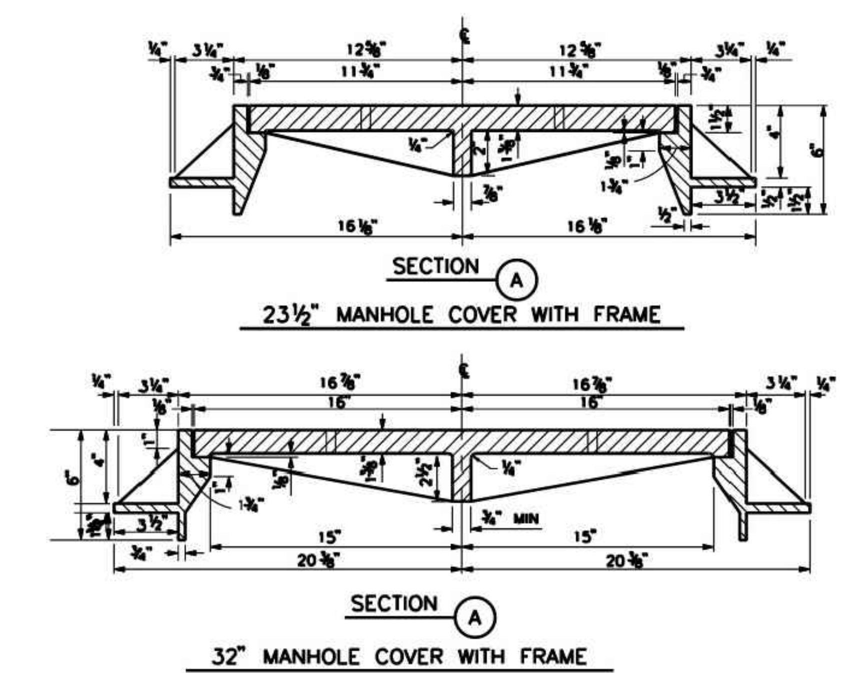

SECTION A
23½" MANHOLE COVER WITH FRAME

SECTION A
32" MANHOLE COVER WITH FRAME

R-3262 Series
Storm Water Curb Openings
Heavy Duty

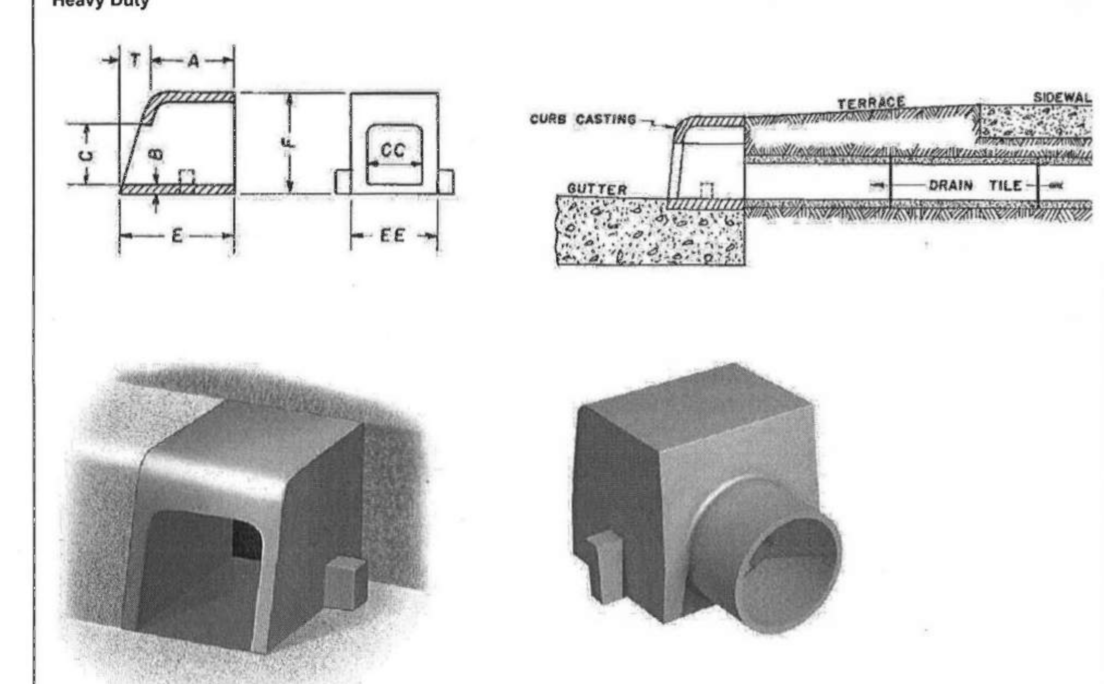

Rear view of R-3262-3 only. (optional)

Curb opening castings are used as shown, where it is advantageous to transmit stormwater from downspout in shallow drains and through the curb to the street gutter.

Catalog No.	A	B	C	C-C	E	E-E	F
R-3262-1	5	1/2	4	4	6	5	7
R-3262-2	6	1/2	4	4	8 1/4	5	6
R-3262-3*	5	1/2	4	5 1/2	6	6 1/2	6 1/2
R-3262-4	5	1/2	4	16	7	17	6 3/8
R-3262-6	6	1/2	6	6	8	7 1/4	9

* 4" ID outlet is optional

CURB OPENING DISCHARGE
NTS

NOTES
1. USE NEENAH FOUNDRY PRODUCT R–3262–3 OR EQUAL AS APPROVED BY CITY.

811 Know what's below. Call before you dig.

REVISION		
DATE	NO.	

garza emc
7708 Rialto Blvd., Suite 125
Austin, Texas 78735
Tel. (512) 298-3284 Fax (512) 298-2592
TBPE # F-14629
Garza EMC, LLC © Copyright 2024

CITY OF JERSEY VILLAGE – A TEXAS STAR COMMUNITY

STATE OF TEXAS
BILAL A. ALIZAI
92792
LICENSED PROFESSIONAL ENGINEER
03-22-2024

DRAINAGE DETAILS

CONGO LANE RECONSTRUCTION, UTILITY & DRAINAGE IMPROVEMENTS

CITY OF JERSEY VILLAGE

DRAWN BY: CM, RC
DESIGNED BY: BAA, PG
QA / QC: BAA
PROJECT NO.: 113756-00002

SHEET 45 OF 67

V:\113756-00002\Civil\00-CAD\113756-00002-STM-DTL.dwg modified by rcharo on Mar 21, 24 10:33 AM

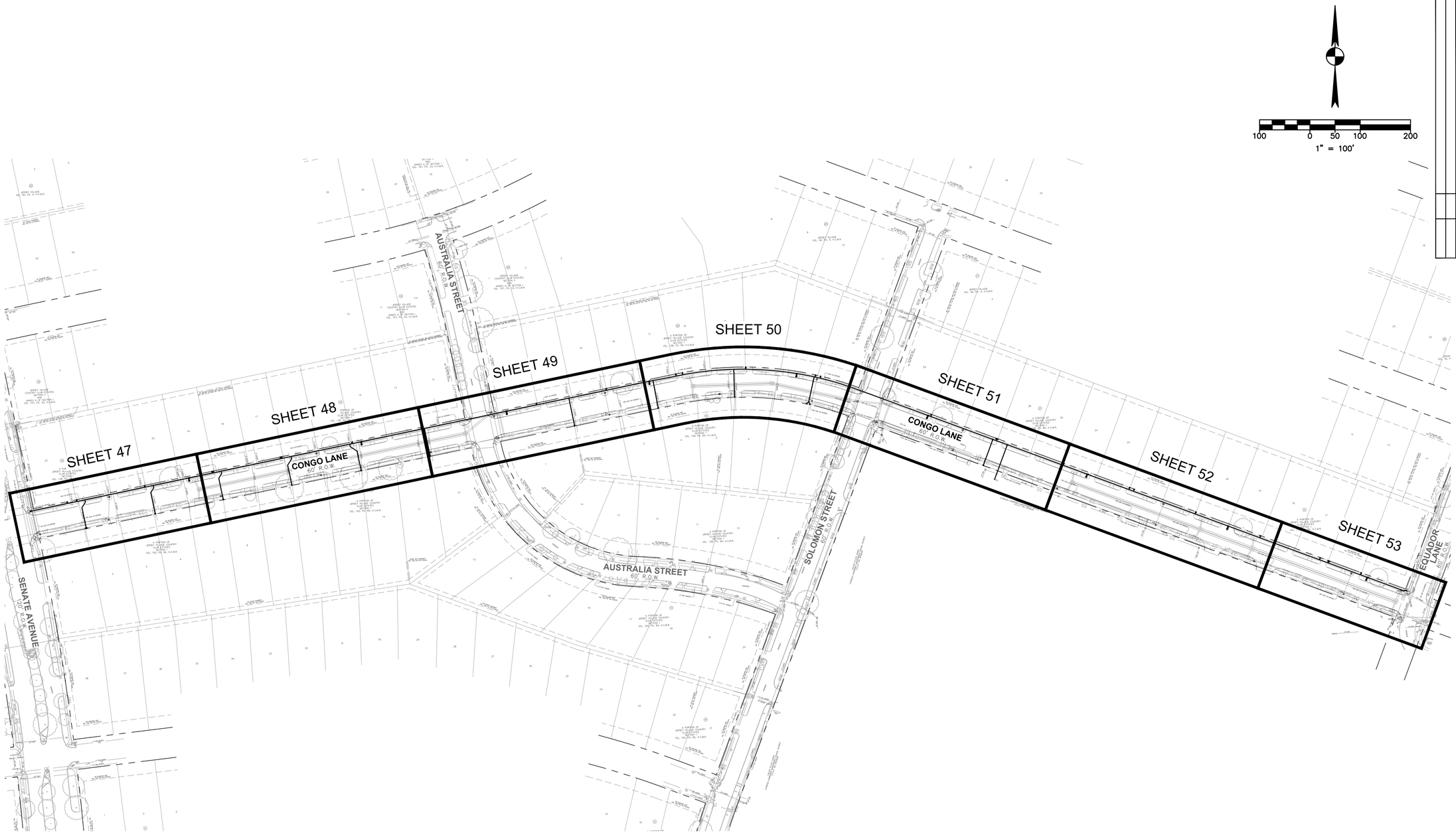

REVISION	NO.	DATE

garza EMC
7708 Rialto Blvd., Suite 125
Austin, Texas 78735
Tel. (512) 298-3284 Fax (512) 298-2592
TBPE # F-14629
Garza EMC, LLC © Copyright 2024

CITY OF JERSEY VILLAGE
A TEXAS STAR COMMUNITY

STATE OF TEXAS
BILAL A. ALIZAI
92792
LICENSED
PROFESSIONAL ENGINEER

03-22-2024

OVERALL WATER LINE LAYOUT

CONGO LANE RECONSTRUCTION, UTILITY & DRAINAGE IMPROVEMENTS

CITY OF JERSEY VILLAGE

DRAWN BY:	CM, RC
DESIGNED BY:	BAA, PG
QA / QC:	BAA
PROJECT NO.:	113756-00002

811 Know what's below. Call before you dig.

SHEET 46 OF 67

V:\113756-00002\Civil\00-CAD\113756-00002-WTR 0.dwg modified by cchairo on Feb 23, 24 12:33 PM

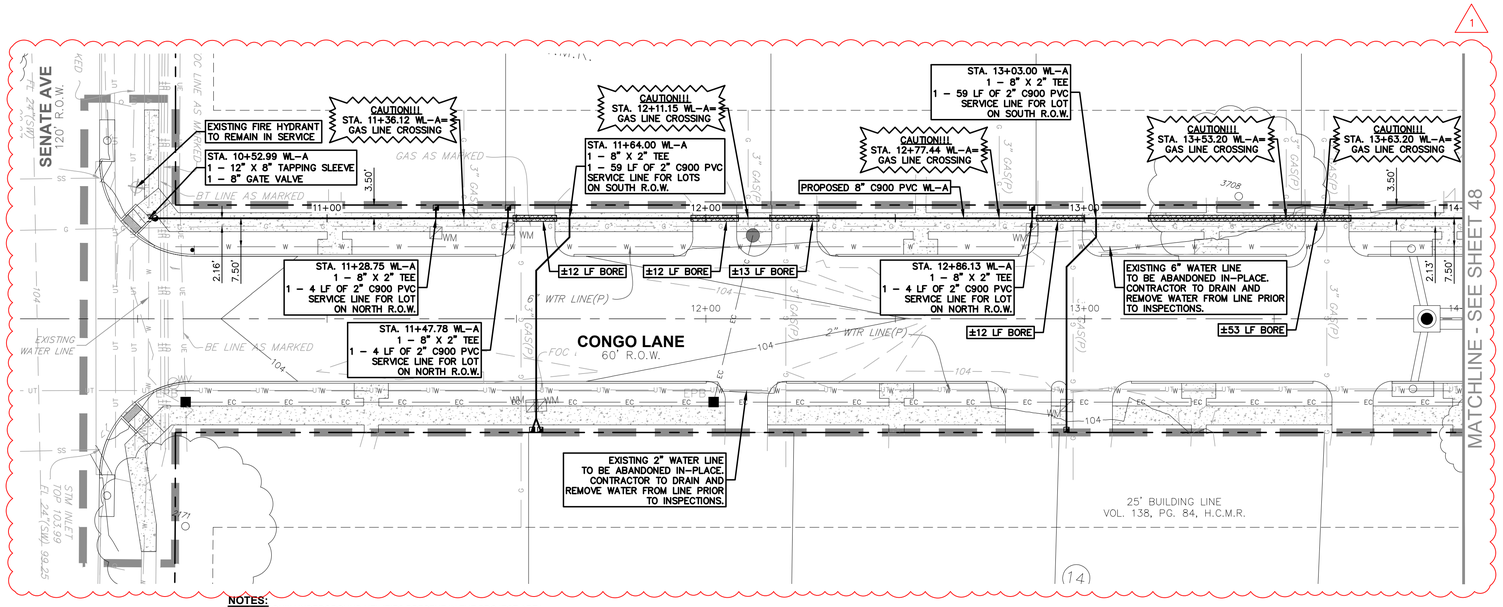

NOTES:

1. CAUTION!!! UNDERGROUND UTILITIES PRESENT IN THE PROJECT AREA. CONTRACTOR MUST USE CAUTION FOR UTILITY CROSSINGS WITH PROPOSED WATER, DRAINAGE AND ROADWAY IMPROVEMENTS. IF THERE ARE UTILITY CONFLICTS OR DISCREPANCIES BETWEEN SURVEY DATA AND FIELD WORK DURING CONSTRUCTION, CONTRACTOR SHALL INFORM THE ENGINEER PRIOR TO PROCEEDING WITH WORK. ENGINEER IS NOT RESPONSIBLE FOR DEPICTING THE EXACT LOCATION OF UNDERGROUND UTILITIES THAT ARE NOT REFLECTED IN THE FIELD SURVEY.
2. CONTRACTOR SHALL COORDINATE WITH CENTERPOINT ENERGY GAS SERVICES, TO ADJUST GAS SERVICE LINES WITHIN THE R.O.W. FOR THE CONSTRUCTION OF THE PROPOSED INFRASTRUCTURE INCLUDING UNDERGROUND WATER AND STORM SEWER LINES. GAS SERVICE LINES TO BE PLACED WITH A MINIMUM OF 24" CLEARANCE FROM ANY PROPOSED UTILITY WITHIN THE R.O.W.
3. FOR FIELD ADJUSTMENTS NEEDED TO UNDERGROUND TELECOMMUNICATIONS OR FIBER OPTIC CABLES AND CONDUITS, CONTRACTOR SHALL COORDINATE WITH SERVICE PROVIDER PRIOR TO MAKING ANY ADJUSTMENTS TO THEIR LINES.
4. CONTRACTOR IS RESPONSIBLE TO FIELD VERIFY ALL EXISTING UNDERGROUND UTILITIES, COMMUNICATION, GAS AND ELECTRICAL LINES PRIOR TO COMMENCING ANY CONSTRUCTION WORK.
5. EXISTING WATER LINES SHALL BE BE CUT, PLUGGED AND ABANDONED IN-PLACE AFTER SERVICES ARE TRANSFERRED FROM THE EXISTING WATER LINES TO THE PROPOSED WATER LINE.
6. PROPOSED 8" WATER LINE ALONG CONGO LANE TO BE INSTALLED BY TRENCH AND BORED WHEN CROSSING TREE CRITICAL ROOT ZONES AND DRIVEWAYS. SEE PLAN FOR BORE LOCATIONS.
7. CONTRACTOR SHALL REMOVE, SALVAGE, RELOCATE AND REINSTALL EXISTING WATER METERS IN NEW BOXES AS NECESSARY TO MAKE NEW SERVICE CONNECTIONS. CONTRACTOR IS RESPONSIBLE FOR DAMAGE TO METER BOXES AND METERS DURING CONSTRUCTION.
8. FOR RESIDENTIAL LOTS WITH 2 METERS (DOMESTIC & IRRIGATION) CONTRACTOR SHALL PROVIDE 2 SEPARATE SERVICE CONNECTIONS TO RETAIN 2 METERS.
9. FOR LOTS WITH ONE METER LOCATED AWAY FROM THE OTHER METER'S FOR NEIGHBORING LOT, USE 1" X 8" TEE TO SERVICE SINGLE METER CONNECTION.
10. FOR METERS DAMAGED DURING CONSTRUCTION, CONTRACTOR SHALL REPLACE WITH 3/4" CITY METER AT CONTRACTOR'S EXPENSE.

WATERLINE A

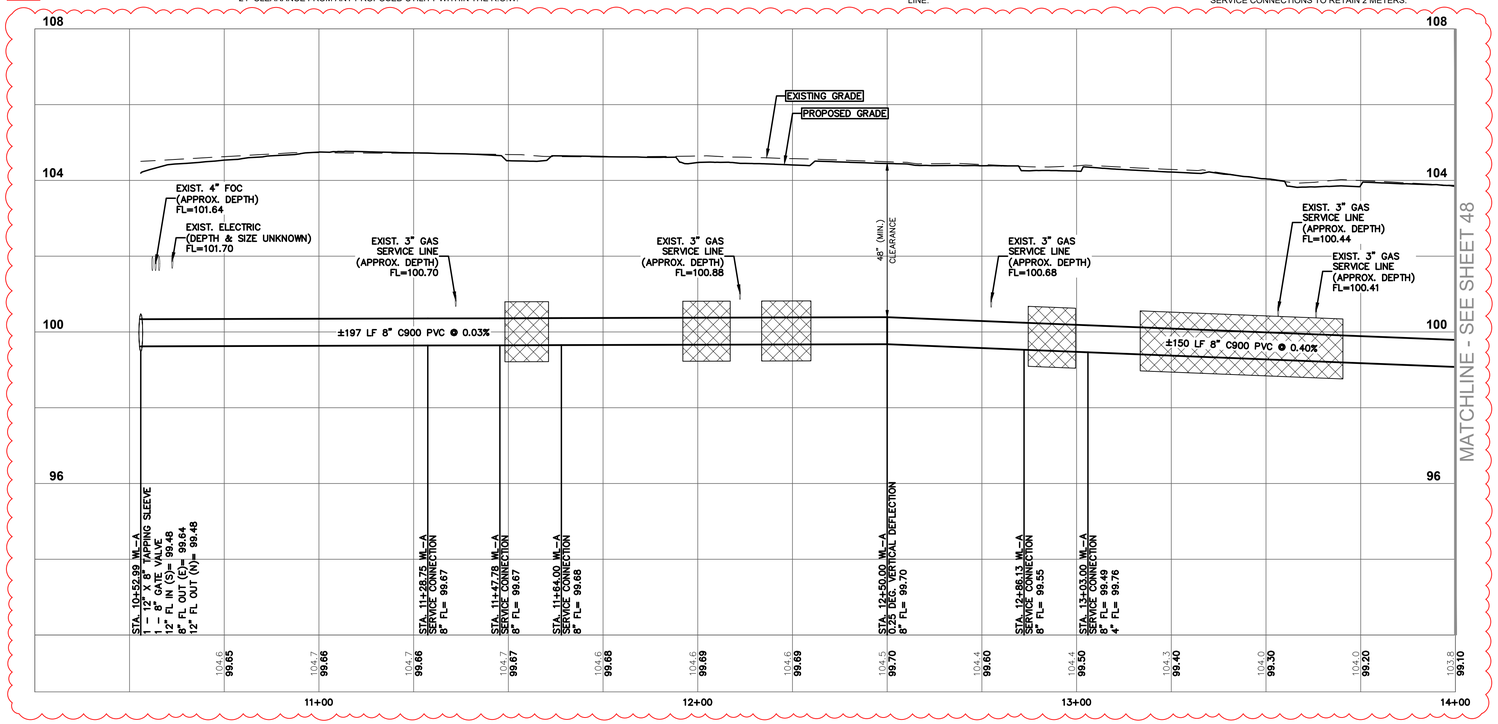

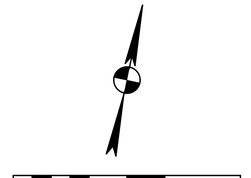

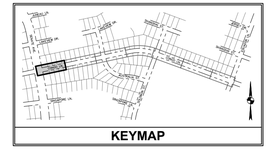

PLAN LEGEND

EXISTING	PROPOSED	DESCRIPTION
		PROPERTY LINE / R.O.W. LINE
		LIGHT POLE
		POWER POLE
		GUY ANCHOR
	EPB	ELECTRIC PULL BOX
		FIRE HYDRANT
		WATER VALVE
		WATER METER
		FIRE DEPARTMENT CONNECTION
		GAS METER
		GAS VALVE
		GRATE INLET
		CURB INLET (SIZE VARIES)
		STORM MANHOLE (SIZE VARIES)
		STORM JUNCTION BOX (SIZE VARIES)
		WASTEWATER MANHOLE (SIZE VARIES)
		WASTEWATER CLEANOUT
		STORMSEWER LINE
		WATER LINE
		WATER LINE BORE
		WASTEWATER LINE
		GAS LINE
		UNDERGROUND ELECTRIC LINE
		OVERHEAD ELECTRIC LINE
		UNDERGROUND TELEPHONE LINE
		ELECTRIC CONDUIT
		LIMITS OF CONSTRUCTION
		CONTOUR
		TREE

PROFILE LEGEND	PROFILE SCALE
EXISTING GRADE AT CENTERLINE	0 5 10 20 HORIZONTAL 1" = 20'
PROPOSED GRADE AT CENTERLINE	
PROPOSED PIPE	
PROPOSED BORE	
PROPOSED STEEL ENCASEMENT	0 0.5 1 2 VERTICAL 1" = 2'
ELEVATION EXISTING GRADE AT CENTERLINE 101.5	ELEVATION PROPOSED INVERT AT CENTERLINE 102.39

Know what's below. Call before you dig.

NOTICE:
FOR YOUR SAFETY, YOU ARE REQUIRED BY TEXAS LAW TO CALL 811 AT LEAST 48 HOURS BEFORE YOU DIG SO THAT UNDERGROUND LINES CAN BE MARKED. THIS SIGNATURE DOES NOT FULFULL YOUR OBLIGATION TO CALL 811.

VERIFICATION OF PRIVATE UTILITY LINES

DATE

CENTERPOINT ENERGY NATURAL GAS UTILITIES SHOWN. (GAS SERVICE LINES ARE NOT SHOWN). THIS SIGNATURE NOT TO BE USED FOR CONFLICT VERIFICATION.
SIGNATURE VALID FOR SIX MONTHS.

DATE

CENTERPOINT ENERGY/UNDERGROUND ELECTRICAL FACILITIES VERIFICATION ONLY.
(THIS SIGNATURE VERIFIES EXISTING UNDERGROUND FACILITIES - NOT TO BE USED FOR CONFLICT VERIFICATION.)
SIGNATURE VALID FOR SIX MONTHS.

DATE

APPROVED FOR AT&T TEXAS/SWBT UNDERGROUND CONDUIT FACILITIES ONLY.
SIGNATURE VALID FOR ONE YEAR.

CONTACT CENTERPOINT ENERGY AT 713-207-2222 TO ARRANGE FOR LINES TO BE TURNED OFF OR MOVED.

FOR YOUR SAFETY, YOU ARE REQUIRED BY TEXAS LAW TO CALL 811 AT LEAST 48 HOURS BEFORE YOU DIG SO THAT UNDERGROUND LINES CAN BE MARKED. THE SIGNATURES BELOW DO NOT FULLFILL YOUR OBLIGATION TO CALL 811.

THE SIGNATURES BELOW ARE NOT TO BE USED FOR CONFLICT VERIFICATION.

CITY OF JERSEY VILLAGE FIRE DEPARTMENT DATE

JERSEY VILLAGE PUBLIC WORKS DEPARTMENT DATE

NO.	DATE	REVISION
1	05/17/2024	REVISED FIRE HYDRANT LOCATION, UPDATED CALLOUTS, ADDED NOTE

garza
7708 Rialto Blvd., Suite 125
Austin, Texas 78735
Tel. (512) 298-3284 Fax (512) 298-2592
TBPE # F-14629

Garza EMC, LLC © Copyright 2024

CITY OF JERSEY VILLAGE
A TEXAS STAR COMMUNITY

BILAL A. ALIZAI
92792
LICENSED
PROFESSIONAL
ENGINEER
05-17-2024

WATER LINE A
PLAN & PROFILE
STA. 10+00 TO 14+00

CONGO LANE RECONSTRUCTION, UTILITY & DRAINAGE IMPROVEMENTS

CITY OF JERSEY VILLAGE

DRAWN BY: CM, RC
DESIGNED BY: BAA, PG
QA / QC: BAA
PROJECT NO.: 113756-00002

SHEET 47 OF 67

V:\113756-00002\Civil\00-CAD\113756-00002-WTR 1.dwg modified by rchiaro on May 17, 24 6:38 AM

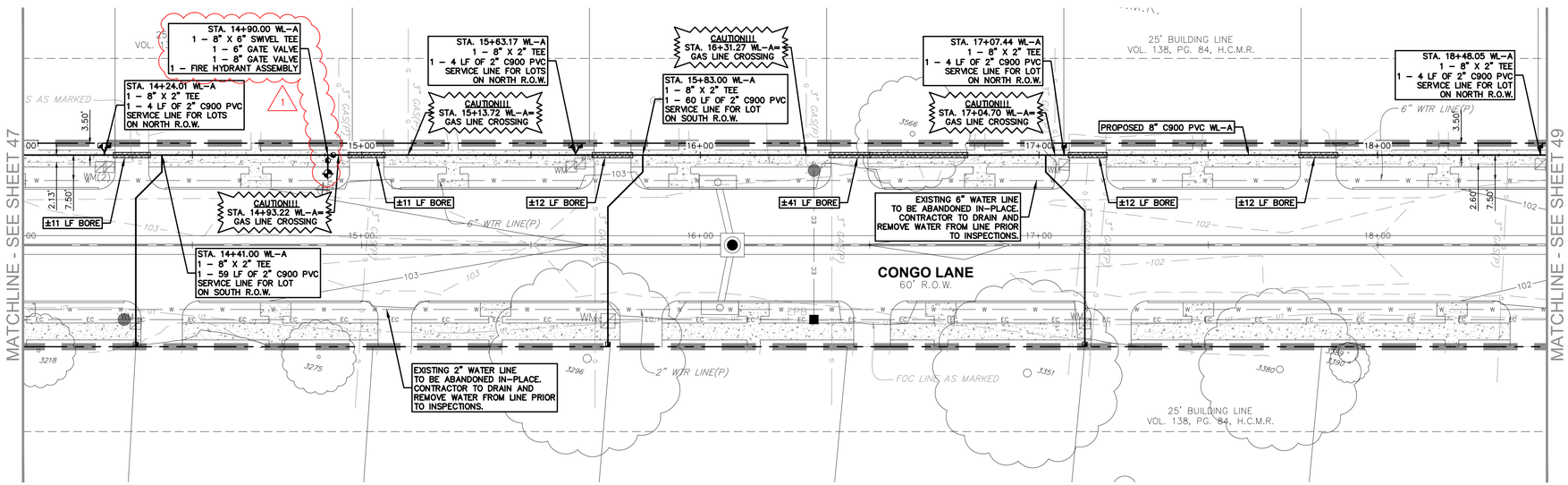

NOTES:

1. CAUTION!!! UNDERGROUND UTILITIES PRESENT IN THE PROJECT AREA. CONTRACTOR MUST USE CAUTION FOR UTILITY CROSSINGS WITH PROPOSED WATER, DRAINAGE AND ROADWAY IMPROVEMENTS. IF THERE ARE UTILITY CONFLICTS OR DISCREPANCIES BETWEEN SURVEY DATA AND FIELD WORK DURING CONSTRUCTION, CONTRACTOR SHALL INFORM THE ENGINEER PRIOR TO PROCEEDING WITH WORK. ENGINEER IS NOT RESPONSIBLE FOR DEPICTING THE EXACT LOCATION OF UNDERGROUND UTILITIES THAT ARE NOT REFLECTED IN THE FIELD SURVEY.
2. CONTRACTOR SHALL COORDINATE WITH CENTERPOINT ENERGY GAS SERVICES, TO ADJUST GAS SERVICE LINES WITHIN THE R.O.W. FOR THE CONSTRUCTION OF THE PROPOSED INFRASTRUCTURE INCLUDING UNDERGROUND WATER AND STORM SEWER LINES. GAS SERVICE LINES TO BE PLACED WITH A MINIMUM OF 24" CLEARANCE FROM ANY PROPOSED UTILITY WITHIN THE R.O.W.

WATERLINE A

3. FOR FIELD ADJUSTMENTS NEEDED TO UNDERGROUND TELECOMMUNICATIONS OR FIBER OPTIC CABLES AND CONDUITS, CONTRACTOR SHALL COORDINATE WITH SERVICE PROVIDER PRIOR TO MAKING ANY ADJUSTMENTS TO THEIR LINES.
4. CONTRACTOR IS RESPONSIBLE TO FIELD VERIFY ALL EXISTING UNDERGROUND UTILITIES, COMMUNICATION, GAS AND ELECTRICAL LINES PRIOR TO COMMENCING ANY CONSTRUCTION WORK.
5. EXISTING WATER LINES SHALL BE BE CUT, PLUGGED AND ABANDONED IN-PLACE AFTER SERVICES ARE TRANSFERRED FROM THE EXISTING WATER LINES TO THE PROPOSED WATER LINE.
6. PROPOSED 8" WATER LINE ALONG CONGO LANE TO BE INSTALLED BY TRENCH AND BORED WHEN CROSSING TREE CRITICAL ROOT ZONES AND DRIVEWAYS. SEE PLAN FOR BORE LOCATIONS.
7. CONTRACTOR SHALL REMOVE, SALVAGE, RELOCATE AND REINSTALL EXISTING WATER METERS IN NEW BOXES AS NECESSARY TO MAKE NEW SERVICE CONNECTIONS. CONTRACTOR IS RESPONSIBLE FOR DAMAGE TO METER BOXES AND METERS DURING CONSTRUCTION.
8. FOR RESIDENTIAL LOTS WITH 2 METERS (DOMESTIC & IRRIGATION) CONTRACTOR SHALL PROVIDE 2 SEPARATE SERVICE CONNECTIONS TO RETAIN 2 METERS.
9. FOR LOTS WITH ONE METER LOCATED AWAY FROM THE OTHER METER'S FOR NEIGHBORING LOT, USE 1" X 8" TEE TO SERVICE SINGLE METER CONNECTION.
10. FOR METERS DAMAGED DURING CONSTRUCTION, CONTRACTOR SHALL REPLACE WITH 3/4" CITY METER AT CONTRACTOR'S EXPENSE.

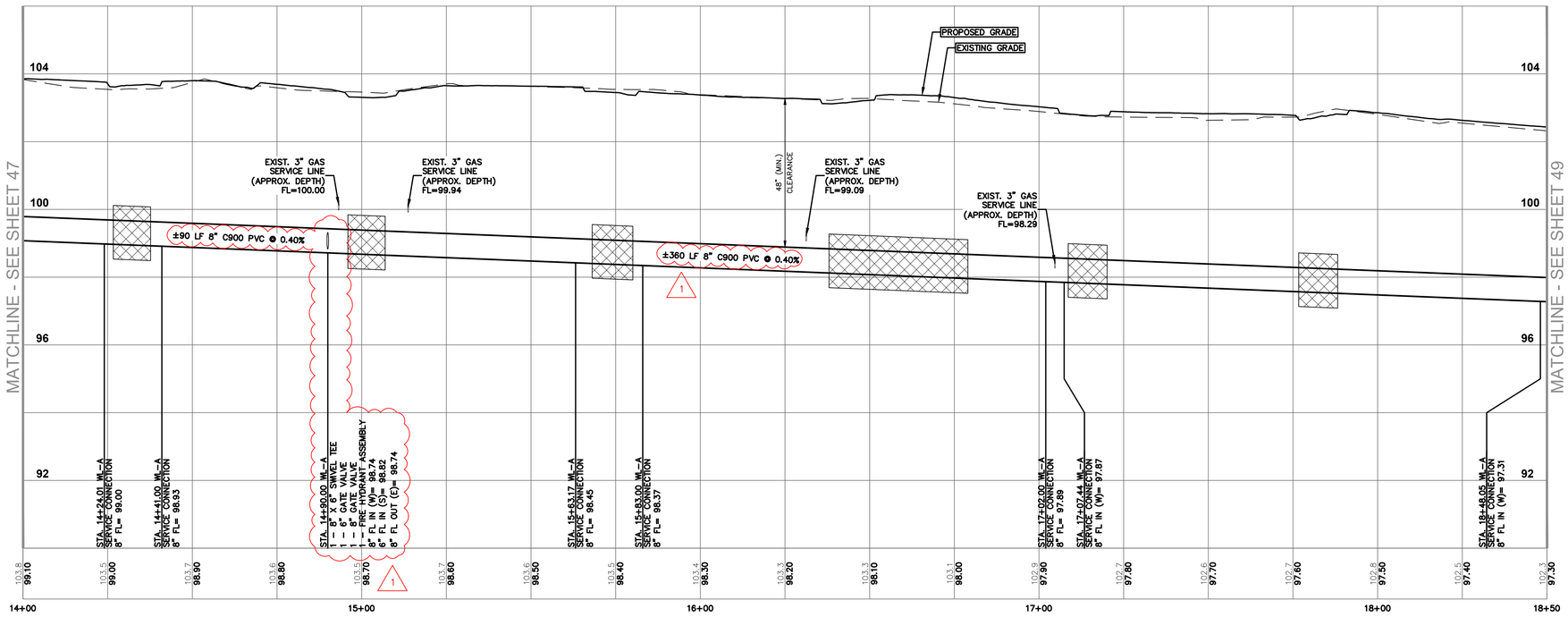

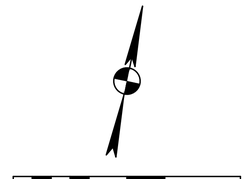

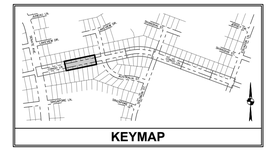

PLAN LEGEND

EXISTING	PROPOSED	DESCRIPTION
		PROPERTY LINE / R.O.W. LINE
		LIGHT POLE
		POWER POLE
		GUY ANCHOR
	EPB	ELECTRIC PULL BOX
		FIRE HYDRANT
		WATER VALVE
		WATER METER
		FIRE DEPARTMENT CONNECTION
		GAS METER
		GAS VALVE
		GRATE INLET
		CURB INLET (SIZE VARIES)
		STORM MANHOLE (SIZE VARIES)
		STORM JUNCTION BOX (SIZE VARIES)
		WASTEWATER MANHOLE (SIZE VARIES)
		WASTEWATER CLEANOUT
		STORMSEWER LINE
		WATER LINE
		WATER LINE BORE
		WASTEWATER LINE
		GAS LINE
		UNDERGROUND ELECTRIC LINE
		OVERHEAD ELECTRIC LINE
		UNDERGROUND TELEPHONE LINE
		ELECTRIC CONDUIT
		LIMITS OF CONSTRUCTION
		CONTOUR
		TREE

PROFILE LEGEND	PROFILE SCALE
EXISTING GRADE AT CENTERLINE	0 5 10 20 HORIZONTAL 1" = 20'
PROPOSED GRADE AT CENTERLINE	
PROPOSED PIPE	
PROPOSED BORE	
PROPOSED STEEL ENCASEMENT	0 0.5 1 2 VERTICAL 1" = 2'
ELEVATION EXISTING GRADE AT CENTERLINE (101.5)	ELEVATION PROPOSED INVERT AT CENTERLINE (102.39)

811 Know what's below. Call before you dig.

NOTICE:
FOR YOUR SAFETY, YOU ARE REQUIRED BY TEXAS LAW TO CALL 811 AT LEAST 48 HOURS BEFORE YOU DIG SO THAT UNDERGROUND LINES CAN BE MARKED. THIS SIGNATURE DOES NOT FULFULL YOUR OBLIGATION TO CALL 811.

VERIFICATION OF PRIVATE UTILITY LINES

DATE

CENTERPOINT ENERGY NATURAL GAS UTILITIES SHOWN. (GAS SERVICE LINES ARE NOT SHOWN). THIS SIGNATURE NOT TO BE USED FOR CONFLICT VERIFICATION.
SIGNATURE VALID FOR SIX MONTHS.

DATE

CENTERPOINT ENERGY/UNDERGROUND ELECTRICAL FACILITIES VERIFICATION ONLY.
(THIS SIGNATURE VERIFIES EXISTING UNDERGROUND FACILITIES - NOT TO BE USED FOR CONFLICT VERIFICATION.)
SIGNATURE VALID FOR SIX MONTHS.

DATE

APPROVED FOR AT&T TEXAS/SWBT UNDERGROUND CONDUIT FACILITIES ONLY.
SIGNATURE VALID FOR ONE YEAR.

CONTACT CENTERPOINT ENERGY AT 713-207-2222 TO ARRANGE FOR LINES TO BE TURNED OFF OR MOVED.

FOR YOUR SAFETY, YOU ARE REQUIRED BY TEXAS LAW TO CALL 811 AT LEAST 48 HOURS BEFORE YOU DIG SO THAT UNDERGROUND LINES CAN BE MARKED. THE SIGNATURES BELOW DO NOT FULLFILL YOUR OBLIGATION TO CALL 811.

THE SIGNATURES BELOW ARE NOT TO BE USED FOR CONFLICT VERIFICATION.

CITY OF JERSEY VILLAGE FIRE DEPARTMENT DATE

JERSEY VILLAGE PUBLIC WORKS DEPARTMENT DATE

NO.	DATE	REVISION
1	05/17/2024	REVISED FIRE HYDRANT LOCATION, UPDATED CALLOUTS

garza EMC
7708 Rialto Blvd., Suite 125
Austin, Texas 78735
Tel. (512) 298-3284 Fax (512) 298-2592
TBPE # F-14629

Garza EMC, LLC © Copyright 2024

CITY OF JERSEY VILLAGE
A TEXAS STAR COMMUNITY

BILAL A. ALIZAI
92792
LICENSED
PROFESSIONAL
ENGINEER

05-17-2024

WATER LINE A
PLAN & PROFILE
STA. 14+00 TO 18+50

CONGO LANE RECONSTRUCTION, UTILITY & DRAINAGE IMPROVEMENTS

CITY OF JERSEY VILLAGE

DRAWN BY: CM, RC
DESIGNED BY: BAA, PG
QA / QC: BAA
PROJECT NO.: 113756-00002

SHEET 48 OF 67

V:\113756-00002\Civil\00-CAD\113756-00002-WTR 2.dwg modified by rchiaro on May 17, 24 6:38 AM

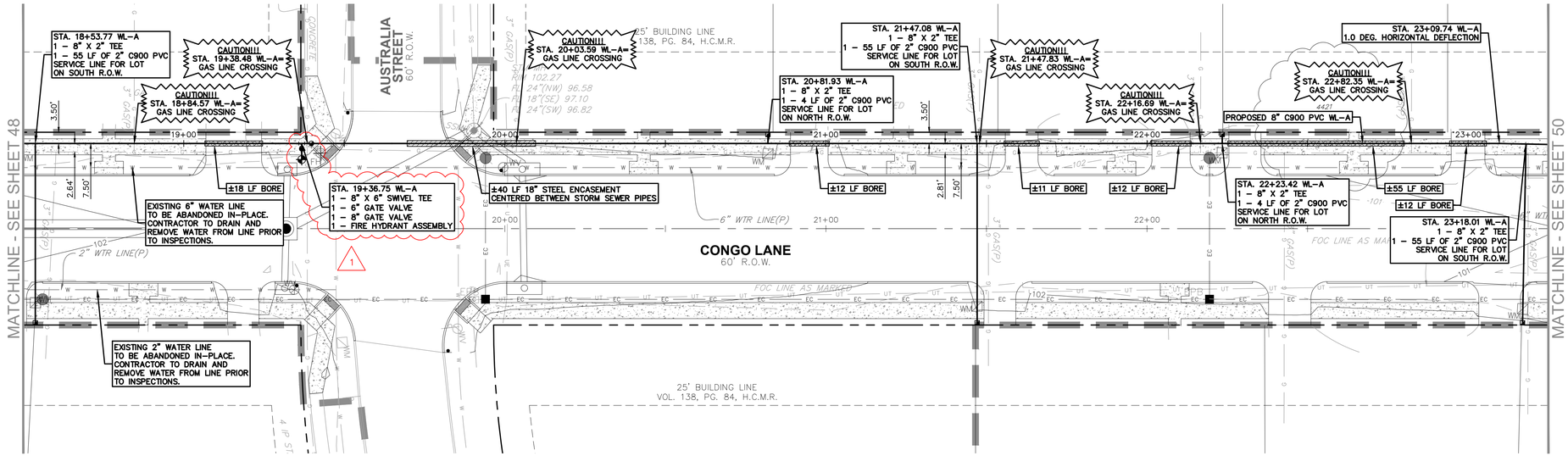

NOTES:

1. CAUTION!!! UNDERGROUND UTILITIES PRESENT IN THE PROJECT AREA. CONTRACTOR MUST USE CAUTION FOR UTILITY CROSSINGS WITH PROPOSED WATER, DRAINAGE AND ROADWAY IMPROVEMENTS. IF THERE ARE UTILITY CONFLICTS OR DISCREPANCIES BETWEEN SURVEY DATA AND FIELD WORK DURING CONSTRUCTION, CONTRACTOR SHALL INFORM THE ENGINEER PRIOR TO PROCEEDING WITH WORK. ENGINEER IS NOT RESPONSIBLE FOR DEPICTING THE EXACT LOCATION OF UNDERGROUND UTILITIES THAT ARE NOT REFLECTED IN THE FIELD SURVEY.
2. CONTRACTOR SHALL COORDINATE WITH CENTERPOINT ENERGY GAS SERVICES, TO ADJUST GAS SERVICE LINES WITHIN THE R.O.W. FOR THE CONSTRUCTION OF THE PROPOSED INFRASTRUCTURE INCLUDING UNDERGROUND WATER AND STORM SEWER LINES. GAS SERVICE LINES TO BE PLACED WITH A MINIMUM OF 24" CLEARANCE FROM ANY PROPOSED UTILITY WITHIN THE R.O.W.
3. FOR FIELD ADJUSTMENTS NEEDED TO UNDERGROUND TELECOMMUNICATIONS OR FIBER OPTIC CABLES AND CONDUITS, CONTRACTOR SHALL COORDINATE WITH SERVICE PROVIDER PRIOR TO MAKING ANY ADJUSTMENTS TO THEIR LINES.
4. CONTRACTOR IS RESPONSIBLE TO FIELD VERIFY ALL EXISTING UNDERGROUND UTILITIES, COMMUNICATION, GAS AND ELECTRICAL LINES PRIOR TO COMMENCING ANY CONSTRUCTION WORK.
5. EXISTING WATER LINES SHALL BE BE CUT, PLUGGED AND ABANDONED IN-PLACE AFTER SERVICES ARE TRANSFERRED FROM THE EXISTING WATER LINES TO THE PROPOSED WATER LINE.
6. PROPOSED 8" WATER LINE ALONG CONGO LANE TO BE INSTALLED BY TRENCH AND BORED WHEN CROSSING TREE CRITICAL ROOT ZONES AND DRIVEWAYS. SEE PLAN FOR BORE LOCATIONS.
7. CONTRACTOR SHALL REMOVE, SALVAGE, RELOCATE AND REINSTALL EXISTING WATER METERS IN NEW BOXES AS NECESSARY TO MAKE NEW SERVICE CONNECTIONS. CONTRACTOR IS RESPONSIBLE FOR DAMAGE TO METER BOXES AND METERS DURING CONSTRUCTION.
8. FOR RESIDENTIAL LOTS WITH 2 METERS (DOMESTIC & IRRIGATION) CONTRACTOR SHALL PROVIDE 2 SEPARATE SERVICE CONNECTIONS TO RETAIN 2 METERS.
9. FOR LOTS WITH ONE METER LOCATED AWAY FROM THE OTHER METER'S FOR NEIGHBORING LOT, USE 1" X 8" TEE TO SERVICE SINGLE METER CONNECTION.
10. FOR METERS DAMAGED DURING CONSTRUCTION, CONTRACTOR SHALL REPLACE WITH 3/4" CITY METER AT CONTRACTOR'S EXPENSE.

WATERLINE A

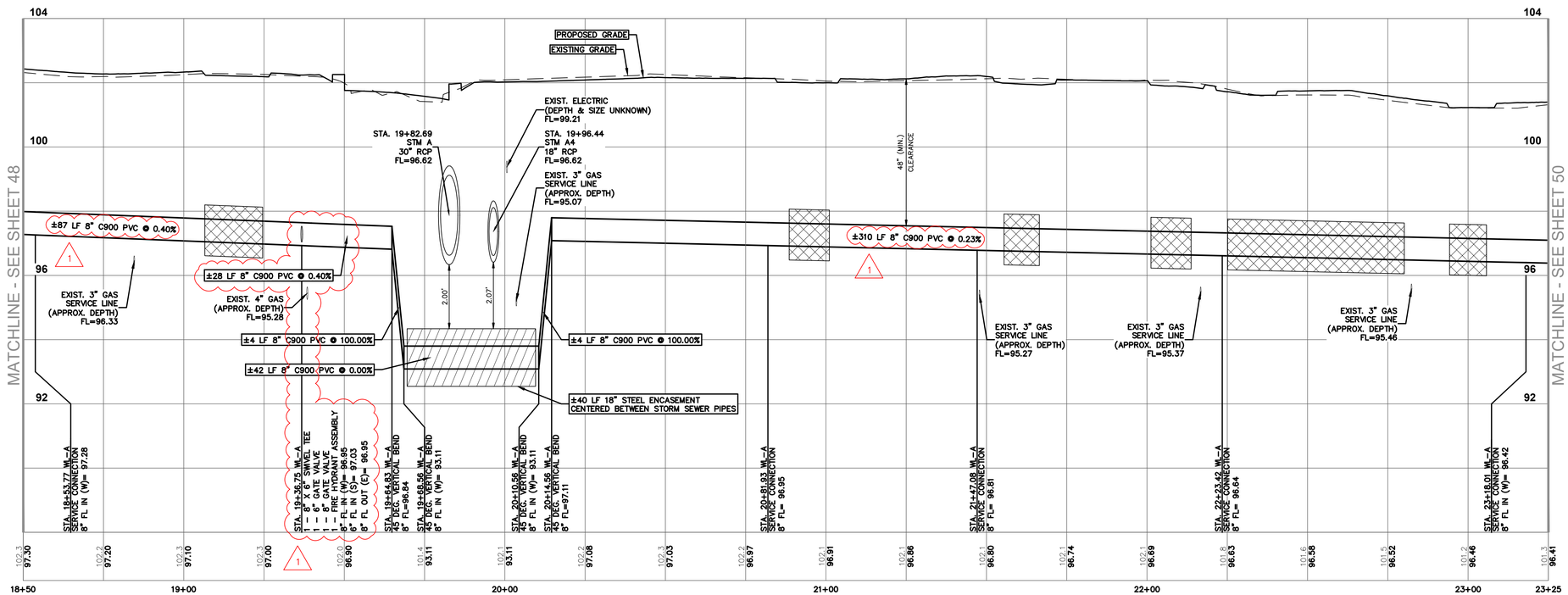

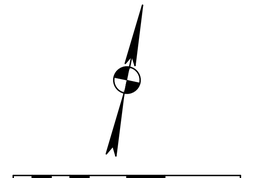

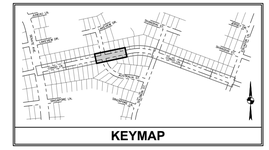

NO.	DATE	REVISION
1	05/17/2024	REVISED FIRE HYDRANT LOCATION, UPDATED CALLOUTS

PLAN LEGEND

EXISTING	PROPOSED	DESCRIPTION
		PROPERTY LINE / R.O.W. LINE
		LIGHT POLE
		POWER POLE
		GUY ANCHOR
	EPB	ELECTRIC PULL BOX
		FIRE HYDRANT
		WATER VALVE
		WATER METER
		FIRE DEPARTMENT CONNECTION
		GAS METER
		GAS VALVE
		GRATE INLET
		CURB INLET (SIZE VARIES)
		STORM MANHOLE (SIZE VARIES)
		STORM JUNCTION BOX (SIZE VARIES)
		WASTEWATER MANHOLE (SIZE VARIES)
		WASTEWATER CLEANOUT
		STORMSEWER LINE
		WATER LINE
		WATER LINE BORE
		WASTEWATER LINE
		GAS LINE
		UNDERGROUND ELECTRIC LINE
		OVERHEAD ELECTRIC LINE
		UNDERGROUND TELEPHONE LINE
	EC	ELECTRIC CONDUIT
		LIMITS OF CONSTRUCTION
100	100	CONTOUR
		TREE

PROFILE LEGEND	PROFILE SCALE
EXISTING GRADE AT CENTERLINE	0 5 10 20 HORIZONTAL 1" = 20'
PROPOSED GRADE AT CENTERLINE	
PROPOSED PIPE	
PROPOSED BORE	
PROPOSED STEEL ENCASEMENT	0 0.5 1 2 VERTICAL 1" = 2'
ELEVATION EXISTING GRADE AT CENTERLINE 101.5	ELEVATION PROPOSED INVERT AT CENTERLINE 102.39

811 Know what's below. Call before you dig.

NOTICE:
FOR YOUR SAFETY, YOU ARE REQUIRED BY TEXAS LAW TO CALL 811 AT LEAST 48 HOURS BEFORE YOU DIG SO THAT UNDERGROUND LINES CAN BE MARKED. THIS SIGNATURE DOES NOT FULFULL YOUR OBLIGATION TO CALL 811.

VERIFICATION OF PRIVATE UTILITY LINES

DATE

CENTERPOINT ENERGY NATURAL GAS UTILITIES SHOWN. (GAS SERVICE LINES ARE NOT SHOWN). THIS SIGNATURE NOT TO BE USED FOR CONFLICT VERIFICATION.
SIGNATURE VALID FOR SIX MONTHS.

DATE

CENTERPOINT ENERGY/UNDERGROUND ELECTRICAL FACILITIES VERIFICATION ONLY.
(THIS SIGNATURE VERIFIES EXISTING UNDERGROUND FACILITIES - NOT TO BE USED FOR CONFLICT VERIFICATION.)
SIGNATURE VALID FOR SIX MONTHS.

DATE

APPROVED FOR AT&T TEXAS/SWBT UNDERGROUND CONDUIT FACILITIES ONLY.
SIGNATURE VALID FOR ONE YEAR.

CONTACT CENTERPOINT ENERGY AT 713-207-2222 TO ARRANGE FOR LINES TO BE TURNED OFF OR MOVED.

FOR YOUR SAFETY, YOU ARE REQUIRED BY TEXAS LAW TO CALL 811 AT LEAST 48 HOURS BEFORE YOU DIG SO THAT UNDERGROUND LINES CAN BE MARKED. THE SIGNATURES BELOW DO NOT FULLFILL YOUR OBLIGATION TO CALL 811.

THE SIGNATURES BELOW ARE NOT TO BE USED FOR CONFLICT VERIFICATION.

CITY OF JERSEY VILLAGE FIRE DEPARTMENT DATE

JERSEY VILLAGE PUBLIC WORKS DEPARTMENT DATE

sb garza
7708 Rialto Blvd., Suite 125
Austin, Texas 78735
Tel. (512) 298-3284 Fax (512) 298-2592
TBPE # F-14629

Garza EMC, LLC © Copyright 2024

CITY OF JERSEY VILLAGE
A TEXAS STAR COMMUNITY

BILAL A. ALIZAI
92792
LICENSED
PROFESSIONAL
ENGINEER
05-17-2024

WATER LINE A PLAN & PROFILE STA. 18+50 TO 23+25

CONGO LANE RECONSTRUCTION, UTILITY & DRAINAGE IMPROVEMENTS

CITY OF JERSEY VILLAGE

DRAWN BY: CM, RC
DESIGNED BY: BAA, PG
QA / QC: BAA
PROJECT NO.: 113756-00002

SHEET 49 OF 67

V:\113756-00002\Civil\00-CAD\113756-00002-WTR 3.dwg modified by rchiaro on May 17, 24 6:59 AM

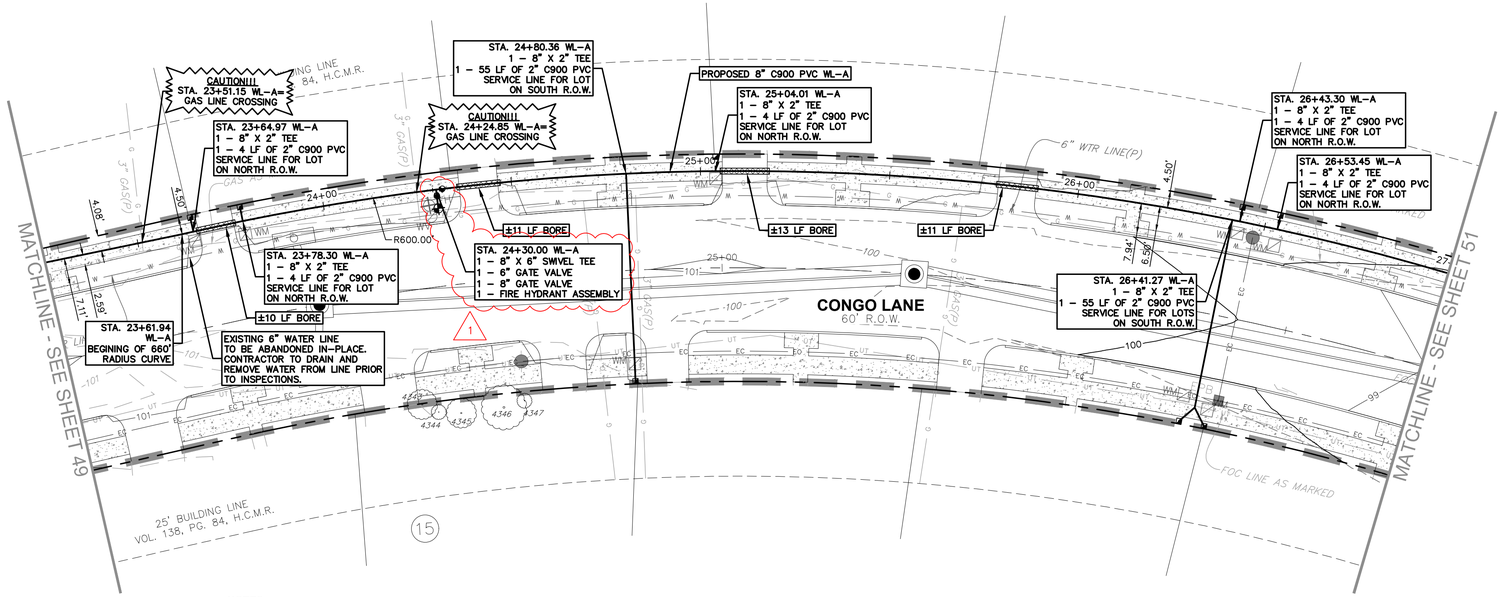

NOTES:

1. CAUTION!!! UNDERGROUND UTILITIES PRESENT IN THE PROJECT AREA. CONTRACTOR MUST USE CAUTION FOR UTILITY CROSSINGS WITH PROPOSED WATER, DRAINAGE AND ROADWAY IMPROVEMENTS. IF THERE ARE UTILITY CONFLICTS OR DISCREPANCIES BETWEEN SURVEY DATA AND FIELD WORK DURING CONSTRUCTION, CONTRACTOR SHALL INFORM THE ENGINEER PRIOR TO PROCEEDING WITH WORK. ENGINEER IS NOT RESPONSIBLE FOR DEPICTING THE EXACT LOCATION OF UNDERGROUND UTILITIES THAT ARE NOT REFLECTED IN THE FIELD SURVEY.
2. CONTRACTOR SHALL COORDINATE WITH CENTERPOINT ENERGY GAS SERVICES, TO ADJUST GAS SERVICE LINES WITHIN THE R.O.W. FOR THE CONSTRUCTION OF THE PROPOSED INFRASTRUCTURE INCLUDING UNDERGROUND WATER AND STORM SEWER LINES. GAS SERVICE LINES TO BE PLACED WITH A MINIMUM OF 24" CLEARANCE FROM ANY PROPOSED UTILITY WITHIN THE R.O.W.
3. FOR FIELD ADJUSTMENTS NEEDED TO UNDERGROUND TELECOMMUNICATIONS OR FIBER OPTIC CABLES AND CONDUITS, CONTRACTOR SHALL COORDINATE WITH SERVICE PROVIDER PRIOR TO MAKING ANY ADJUSTMENTS TO THEIR LINES.
4. CONTRACTOR IS RESPONSIBLE TO FIELD VERIFY ALL EXISTING UNDERGROUND UTILITIES, COMMUNICATION, GAS AND ELECTRICAL LINES PRIOR TO COMMENCING ANY CONSTRUCTION WORK.
5. EXISTING WATER LINES SHALL BE BE CUT, PLUGGED AND ABANDONED IN-PLACE AFTER SERVICES ARE TRANSFERRED FROM THE EXISTING WATER LINES TO THE PROPOSED WATER LINE.
6. PROPOSED 8" WATER LINE ALONG CONGO LANE TO BE INSTALLED BY TRENCH AND BORED WHEN CROSSING TREE CRITICAL ROOT ZONES AND DRIVEWAYS. SEE PLAN FOR BORE LOCATIONS.
7. CONTRACTOR SHALL REMOVE, SALVAGE, RELOCATE AND REINSTALL EXISTING WATER METERS IN NEW BOXES AS NECESSARY TO MAKE NEW SERVICE CONNECTIONS. CONTRACTOR IS RESPONSIBLE FOR DAMAGE TO METER BOXES AND METERS DURING CONSTRUCTION.
8. FOR RESIDENTIAL LOTS WITH 2 METERS (DOMESTIC & IRRIGATION) CONTRACTOR SHALL PROVIDE 2 SEPARATE SERVICE CONNECTIONS TO RETAIN 2 METERS.
9. FOR LOTS WITH ONE METER LOCATED AWAY FROM THE OTHER METER'S FOR NEIGHBORING LOT, USE 1" X 8" TEE TO SERVICE SINGLE METER CONNECTION.
10. FOR METERS DAMAGED DURING CONSTRUCTION, CONTRACTOR SHALL REPLACE WITH 3/4" CITY METER AT CONTRACTOR'S EXPENSE.

WATERLINE A

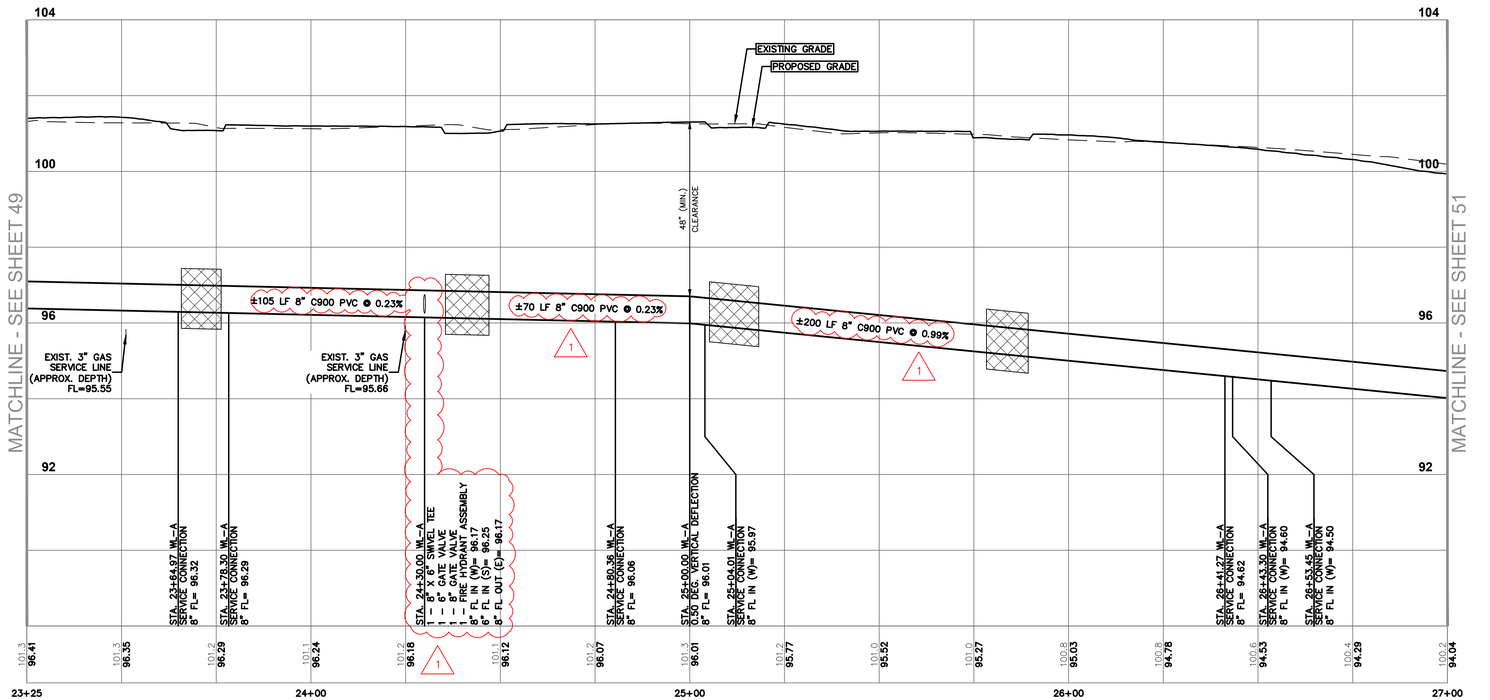

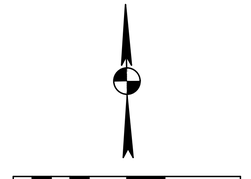

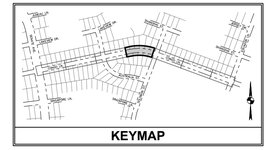

KEYMAP

PLAN LEGEND

EXISTING	PROPOSED	DESCRIPTION
		PROPERTY LINE / R.O.W. LINE
		LIGHT POLE
		POWER POLE
		GUY ANCHOR
	EPB	ELECTRIC PULL BOX
		FIRE HYDRANT
		WATER VALVE
		WATER METER
		FIRE DEPARTMENT CONNECTION
		GAS METER
		GAS VALVE
		GRATE INLET
		CURB INLET (SIZE VARIES)
		STORM MANHOLE (SIZE VARIES)
		STORM JUNCTION BOX (SIZE VARIES)
		WASTEWATER MANHOLE (SIZE VARIES)
		WASTEWATER CLEANOUT
		STORMSEWER LINE
		WATER LINE
		WATER LINE BORE
		WASTEWATER LINE
		GAS LINE
		UNDERGROUND ELECTRIC LINE
		OVERHEAD ELECTRIC LINE
		UNDERGROUND TELEPHONE LINE
	EC	ELECTRIC CONDUIT
		LIMITS OF CONSTRUCTION
100	100	CONTOUR
		TREE

PROFILE LEGEND		PROFILE SCALE
	EXISTING GRADE AT CENTERLINE	0 5 10 20 HORIZONTAL 1" = 20'
	PROPOSED GRADE AT CENTERLINE	
	PROPOSED PIPE	
	PROPOSED BORE	
	PROPOSED STEEL ENCASEMENT	0 0.5 1 2 VERTICAL 1" = 2'
ELEVATION EXISTING GRADE AT CENTERLINE 101.5	ELEVATION PROPOSED INVERT AT CENTERLINE 102.39	

Know what's below. Call before you dig.

NOTICE:
FOR YOUR SAFETY, YOU ARE REQUIRED BY TEXAS LAW TO CALL 811 AT LEAST 48 HOURS BEFORE YOU DIG SO THAT UNDERGROUND LINES CAN BE MARKED. THIS SIGNATURE DOES NOT FULFULL YOUR OBLIGATION TO CALL 811.

VERIFICATION OF PRIVATE UTILITY LINES

DATE

CENTERPOINT ENERGY NATURAL GAS UTILITIES SHOWN. (GAS SERVICE LINES ARE NOT SHOWN). THIS SIGNATURE NOT TO BE USED FOR CONFLICT VERIFICATION.
SIGNATURE VALID FOR SIX MONTHS.

DATE

CENTERPOINT ENERGY/UNDERGROUND ELECTRICAL FACILITIES VERIFICATION ONLY.
(THIS SIGNATURE VERIFIES EXISTING UNDERGROUND FACILITIES - NOT TO BE USED FOR CONFLICT VERIFICATION.)
SIGNATURE VALID FOR SIX MONTHS.

DATE

APPROVED FOR AT&T TEXAS/SWBT UNDERGROUND CONDUIT FACILITIES ONLY.
SIGNATURE VALID FOR ONE YEAR.

CONTACT CENTERPOINT ENERGY AT 713-207-2222 TO ARRANGE FOR LINES TO BE TURNED OFF OR MOVED.

FOR YOUR SAFETY, YOU ARE REQUIRED BY TEXAS LAW TO CALL 811 AT LEAST 48 HOURS BEFORE YOU DIG SO THAT UNDERGROUND LINES CAN BE MARKED. THE SIGNATURES BELOW DO NOT FULLFILL YOUR OBLIGATION TO CALL 811.

THE SIGNATURES BELOW ARE NOT TO BE USED FOR CONFLICT VERIFICATION.

CITY OF JERSEY VILLAGE FIRE DEPARTMENT DATE

JERSEY VILLAGE PUBLIC WORKS DEPARTMENT DATE

NO.	DATE	REVISION
1	05/17/2024	REVISED FIRE HYDRANT LOCATION, UPDATED CALLOUTS

sb garza
7708 Rialto Blvd., Suite 125
Austin, Texas 78735
Tel. (512) 298-3284 Fax (512) 298-2592
TBPE # F-14629

Garza EMC, LLC © Copyright 2024

CITY OF JERSEY VILLAGE
A TEXAS STAR COMMUNITY

BILAL A. ALIZAI
92792
LICENSED
PROFESSIONAL
ENGINEER
05-17-2024

WATER LINE A PLAN & PROFILE STA. 23+25 TO 27+00

CONGO LANE RECONSTRUCTION, UTILITY & DRAINAGE IMPROVEMENTS

CITY OF JERSEY VILLAGE

DRAWN BY: CM, RC
DESIGNED BY: BAA, PG
QA / QC: BAA
PROJECT NO.: 113756-00002

SHEET 50 OF 67

V:\113756-00002\Civil\00-CAD\113756-00002-WTR 4.dwg modified by rchiaro on May 17, 24 7:00 AM

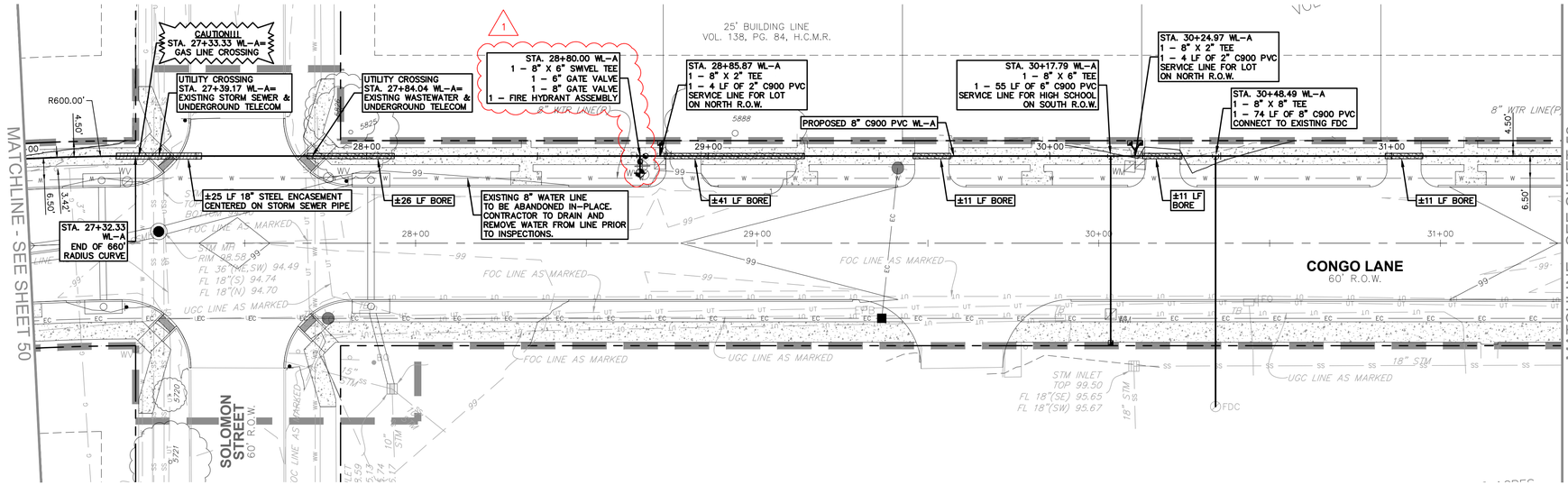

NOTES:

1. CAUTION!!! UNDERGROUND UTILITIES PRESENT IN THE PROJECT AREA. CONTRACTOR MUST USE CAUTION FOR UTILITY CROSSINGS WITH PROPOSED WATER, DRAINAGE AND ROADWAY IMPROVEMENTS. IF THERE ARE UTILITY CONFLICTS OR DISCREPANCIES BETWEEN SURVEY DATA AND FIELD WORK DURING CONSTRUCTION, CONTRACTOR SHALL INFORM THE ENGINEER PRIOR TO PROCEEDING WITH WORK. ENGINEER IS NOT RESPONSIBLE FOR DEPICTING THE EXACT LOCATION OF UNDERGROUND UTILITIES THAT ARE NOT REFLECTED IN THE FIELD SURVEY.
2. CONTRACTOR SHALL COORDINATE WITH CENTERPOINT ENERGY GAS SERVICES, TO ADJUST GAS SERVICE LINES WITHIN THE R.O.W. FOR THE CONSTRUCTION OF THE PROPOSED INFRASTRUCTURE INCLUDING UNDERGROUND WATER AND STORM SEWER LINES. GAS SERVICE LINES TO BE PLACED WITH A MINIMUM OF 24" CLEARANCE FROM ANY PROPOSED UTILITY WITHIN THE R.O.W.
3. FOR FIELD ADJUSTMENTS NEEDED TO UNDERGROUND TELECOMMUNICATIONS OR FIBER OPTIC CABLES AND CONDUITS, CONTRACTOR SHALL COORDINATE WITH SERVICE PROVIDER PRIOR TO MAKING ANY ADJUSTMENTS TO THEIR LINES.
4. CONTRACTOR IS RESPONSIBLE TO FIELD VERIFY ALL EXISTING UNDERGROUND UTILITIES, COMMUNICATION, GAS AND ELECTRICAL LINES PRIOR TO COMMENCING ANY CONSTRUCTION WORK.
5. EXISTING WATER LINES SHALL BE BE CUT, PLUGGED AND ABANDONED IN-PLACE AFTER SERVICES ARE TRANSFERRED FROM THE EXISTING WATER LINES TO THE PROPOSED WATER LINE.
6. PROPOSED 8" WATER LINE ALONG CONGO LANE TO BE INSTALLED BY TRENCH AND BORED WHEN CROSSING TREE CRITICAL ROOT ZONES AND DRIVEWAYS. SEE PLAN FOR BORE LOCATIONS.
7. CONTRACTOR SHALL REMOVE, SALVAGE, RELOCATE AND REINSTALL EXISTING WATER METERS IN NEW BOXES AS NECESSARY TO MAKE NEW SERVICE CONNECTIONS. CONTRACTOR IS RESPONSIBLE FOR DAMAGE TO METER BOXES AND METERS DURING CONSTRUCTION.
8. FOR RESIDENTIAL LOTS WITH 2 METERS (DOMESTIC & IRRIGATION) CONTRACTOR SHALL PROVIDE 2 SEPARATE SERVICE CONNECTIONS TO RETAIN 2 METERS.
9. FOR LOTS WITH ONE METER LOCATED AWAY FROM THE OTHER METER'S FOR NEIGHBORING LOT, USE 1" X 8" TEE TO SERVICE SINGLE METER CONNECTION.
10. FOR METERS DAMAGED DURING CONSTRUCTION, CONTRACTOR SHALL REPLACE WITH 3/4" CITY METER AT CONTRACTOR'S EXPENSE.

WATERLINE A

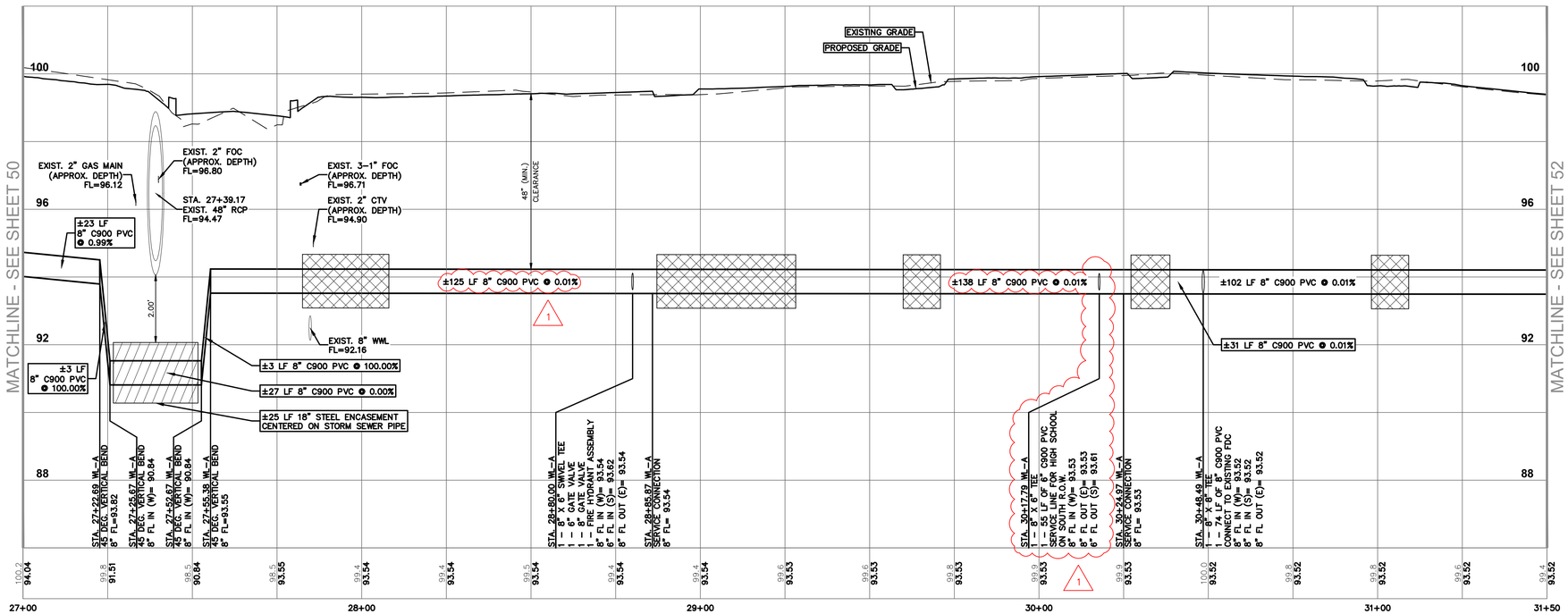

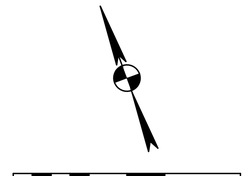

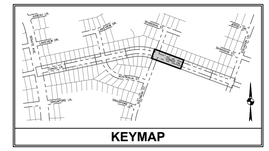

NO.	DATE	REVISION
1	05/17/2024	REVISED FIRE HYDRANT LOCATION, UPDATED CALLOUTS

PLAN LEGEND

EXISTING	PROPOSED	DESCRIPTION
		PROPERTY LINE / R.O.W. LINE
		LIGHT POLE
PP		POWER POLE
GAE		GUY ANCHOR
	EPB	ELECTRIC PULL BOX
FH		FIRE HYDRANT
WV		WATER VALVE
WM		WATER METER
FDC		FIRE DEPARTMENT CONNECTION
GM		GAS METER
		GAS VALVE
		GRATE INLET
		CURB INLET (SIZE VARIES)
SSMH		STORM MANHOLE (SIZE VARIES)
		STORM JUNCTION BOX (SIZE VARIES)
SSMH		WASTEWATER MANHOLE (SIZE VARIES)
CO		WASTEWATER CLEANOUT
SS		STORMSEWER LINE
W		WATER LINE
		WATER LINE BORE
WW		WASTEWATER LINE
G		GAS LINE
UE		UNDERGROUND ELECTRIC LINE
OE		OVERHEAD ELECTRIC LINE
UT		UNDERGROUND TELEPHONE LINE
	EC	ELECTRIC CONDUIT
		LIMITS OF CONSTRUCTION
100	100	CONTOUR
1311		TREE

PROFILE LEGEND	PROFILE SCALE
EXISTING GRADE AT CENTERLINE	0 5 10 20 HORIZONTAL 1" = 20'
PROPOSED GRADE AT CENTERLINE	
PROPOSED PIPE	
PROPOSED BORE	
PROPOSED STEEL ENCASEMENT	0 0.5 1 2 VERTICAL 1" = 2'
ELEVATION EXISTING GRADE AT CENTERLINE 101.5	ELEVATION PROPOSED INVERT AT CENTERLINE 102.39

Know what's below. Call before you dig.

NOTICE:
FOR YOUR SAFETY, YOU ARE REQUIRED BY TEXAS LAW TO CALL 811 AT LEAST 48 HOURS BEFORE YOU DIG SO THAT UNDERGROUND LINES CAN BE MARKED. THIS SIGNATURE DOES NOT FULFULL YOUR OBLIGATION TO CALL 811.

VERIFICATION OF PRIVATE UTILITY LINES

DATE

CENTERPOINT ENERGY NATURAL GAS UTILITIES SHOWN. (GAS SERVICE LINES ARE NOT SHOWN). THIS SIGNATURE NOT TO BE USED FOR CONFLICT VERIFICATION.
SIGNATURE VALID FOR SIX MONTHS.

DATE

CENTERPOINT ENERGY/UNDERGROUND ELECTRICAL FACILITIES VERIFICATION ONLY.
(THIS SIGNATURE VERIFIES EXISTING UNDERGROUND FACILITIES - NOT TO BE USED FOR CONFLICT VERIFICATION.)
SIGNATURE VALID FOR SIX MONTHS.

DATE

APPROVED FOR AT&T TEXAS/SWBT UNDERGROUND CONDUIT FACILITIES ONLY.
SIGNATURE VALID FOR ONE YEAR.

CONTACT CENTERPOINT ENERGY AT 713-207-2222 TO ARRANGE FOR LINES TO BE TURNED OFF OR MOVED.

FOR YOUR SAFETY, YOU ARE REQUIRED BY TEXAS LAW TO CALL 811 AT LEAST 48 HOURS BEFORE YOU DIG SO THAT UNDERGROUND LINES CAN BE MARKED. THE SIGNATURES BELOW DO NOT FULLFILL YOUR OBLIGATION TO CALL 811.

THE SIGNATURES BELOW ARE NOT TO BE USED FOR CONFLICT VERIFICATION.

CITY OF JERSEY VILLAGE FIRE DEPARTMENT DATE

JERSEY VILLAGE PUBLIC WORKS DEPARTMENT DATE

garza EMC
7708 Rialto Blvd., Suite 125
Austin, Texas 78735
Tel. (512) 298-3284 Fax (512) 298-2592
TBPE # F-14629
Garza EMC, LLC © Copyright 2024

CITY OF JERSEY VILLAGE
A TEXAS STAR COMMUNITY

LICENSED PROFESSIONAL ENGINEER
BILAL A. ALIZAI
92792
05-17-2024

WATER LINE A
PLAN & PROFILE
STA. 27+00 TO 31+50

CONGO LANE RECONSTRUCTION,
UTILITY & DRAINAGE IMPROVEMENTS

CITY OF JERSEY VILLAGE

DRAWN BY: CM, RC
DESIGNED BY: BAA, PG
QA / QC: BAA
PROJECT NO.: 113756-00002

SHEET
51
OF 67

V:\113756-00002\Civil\00-CAD\113756-00002-WTR 5.dwg modified by rchiaro on May 17, 24 7:10 AM

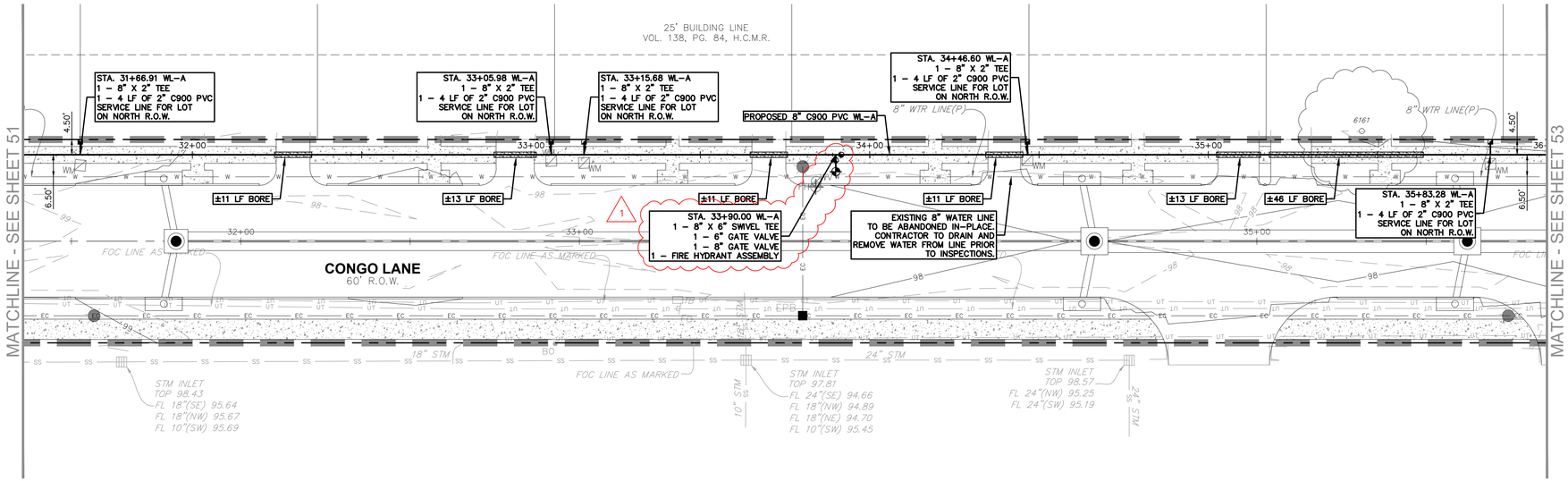

NOTES:

1. CAUTION!!! UNDERGROUND UTILITIES PRESENT IN THE PROJECT AREA. CONTRACTOR MUST USE CAUTION FOR UTILITY CROSSINGS WITH PROPOSED WATER, DRAINAGE AND ROADWAY IMPROVEMENTS. IF THERE ARE UTILITY CONFLICTS OR DISCREPANCIES BETWEEN SURVEY DATA AND FIELD WORK DURING CONSTRUCTION, CONTRACTOR SHALL INFORM THE ENGINEER PRIOR TO PROCEEDING WITH WORK. ENGINEER IS NOT RESPONSIBLE FOR DEPICTING THE EXACT LOCATION OF UNDERGROUND UTILITIES THAT ARE NOT REFLECTED IN THE FIELD SURVEY.
2. CONTRACTOR SHALL COORDINATE WITH CENTERPOINT ENERGY GAS SERVICES, TO ADJUST GAS SERVICE LINES WITHIN THE R.O.W. FOR THE CONSTRUCTION OF THE PROPOSED INFRASTRUCTURE INCLUDING UNDERGROUND WATER AND STORM SEWER LINES. GAS SERVICE LINES TO BE PLACED WITH A MINIMUM OF 24" CLEARANCE FROM ANY PROPOSED UTILITY WITHIN THE R.O.W.

WATERLINE A

3. FOR FIELD ADJUSTMENTS NEEDED TO UNDERGROUND TELECOMMUNICATIONS OR FIBER OPTIC CABLES AND CONDUITS, CONTRACTOR SHALL COORDINATE WITH SERVICE PROVIDER PRIOR TO MAKING ANY ADJUSTMENTS TO THEIR LINES.
4. CONTRACTOR IS RESPONSIBLE TO FIELD VERIFY ALL EXISTING UNDERGROUND UTILITIES, COMMUNICATION, GAS AND ELECTRICAL LINES PRIOR TO COMMENCING ANY CONSTRUCTION WORK.
5. EXISTING WATER LINES SHALL BE BE CUT, PLUGGED AND ABANDONED IN-PLACE AFTER SERVICES ARE TRANSFERRED FROM THE EXISTING WATER LINES TO THE PROPOSED WATER LINE.
6. PROPOSED 8" WATER LINE ALONG CONGO LANE TO BE INSTALLED BY TRENCH AND BORED WHEN CROSSING TREE CRITICAL ROOT ZONES AND DRIVEWAYS. SEE PLAN FOR BORE LOCATIONS.
7. CONTRACTOR SHALL REMOVE, SALVAGE, RELOCATE AND REINSTALL EXISTING WATER METERS IN NEW BOXES AS NECESSARY TO MAKE NEW SERVICE CONNECTIONS. CONTRACTOR IS RESPONSIBLE FOR DAMAGE TO METER BOXES AND METERS DURING CONSTRUCTION.
8. FOR RESIDENTIAL LOTS WITH 2 METERS (DOMESTIC & IRRIGATION) CONTRACTOR SHALL PROVIDE 2 SEPARATE SERVICE CONNECTIONS TO RETAIN 2 METERS.
9. FOR LOTS WITH ONE METER LOCATED AWAY FROM THE OTHER METER'S FOR NEIGHBORING LOT, USE 1" X 8" TEE TO SERVICE SINGLE METER CONNECTION.
10. FOR METERS DAMAGED DURING CONSTRUCTION, CONTRACTOR SHALL REPLACE WITH 3/4" CITY METER AT CONTRACTOR'S EXPENSE.

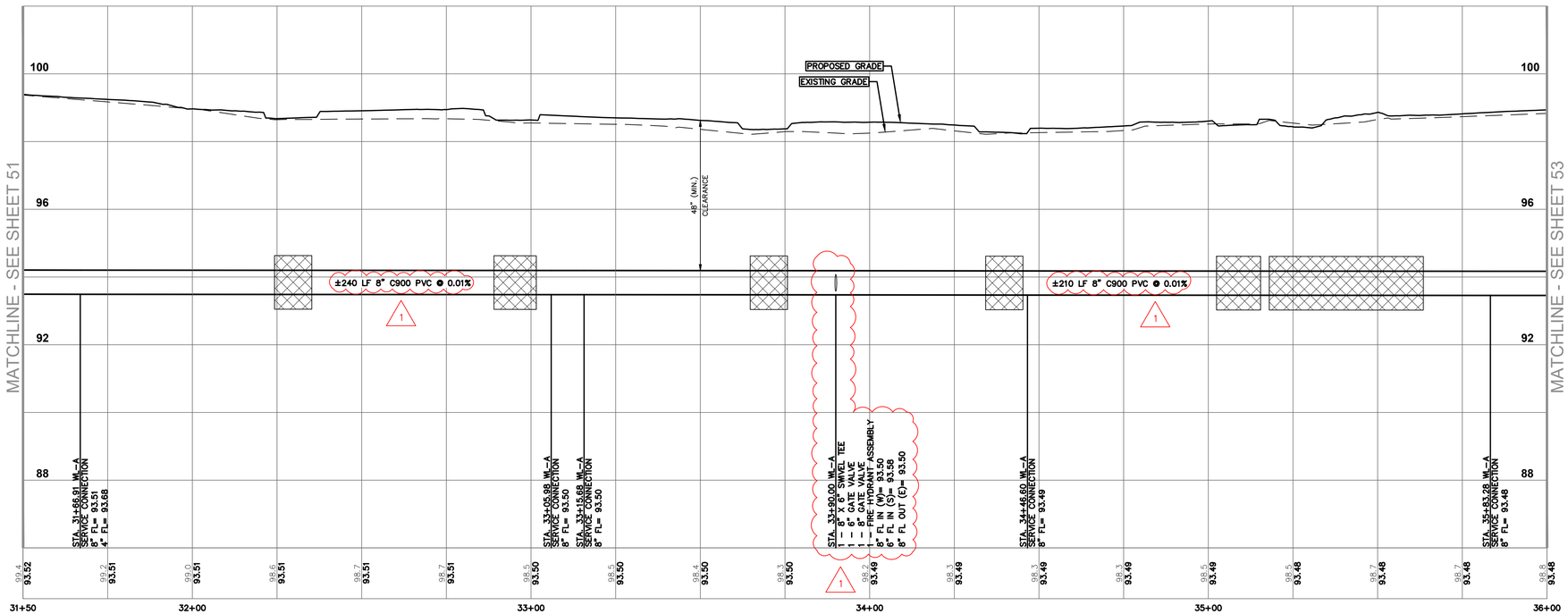

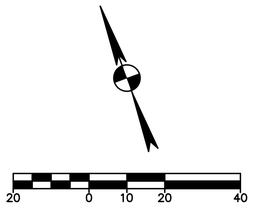

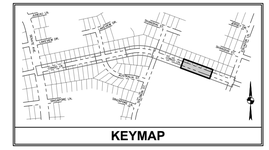
KEYMAP

NO.	DATE	REVISION
1	05/17/2024	REVISED FIRE HYDRANT LOCATION, UPDATED CALLOUTS

PLAN LEGEND

EXISTING	PROPOSED	DESCRIPTION
		PROPERTY LINE / R.O.W. LINE
PP		LIGHT POLE
GAE		POWER POLE
		GUY ANCHOR
	EPB	ELECTRIC PULL BOX
FH		FIRE HYDRANT
WV		WATER VALVE
WM		WATER METER
FDC		FIRE DEPARTMENT CONNECTION
GM		GAS METER
		GAS VALVE
		GRATE INLET
		CURB INLET (SIZE VARIES)
SSMH		STORM MANHOLE (SIZE VARIES)
		STORM JUNCTION BOX (SIZE VARIES)
SSMH		WASTEWATER MANHOLE (SIZE VARIES)
COs		WASTEWATER CLEANOUT
SS		STORMSEWER LINE
W		WATER LINE
		WATER LINE BORE
WW		WASTEWATER LINE
G		GAS LINE
UE		UNDERGROUND ELECTRIC LINE
OE		OVERHEAD ELECTRIC LINE
UT		UNDERGROUND TELEPHONE LINE
		ELECTRIC CONDUIT
EC		LIMITS OF CONSTRUCTION
100	100	CONTOUR
1777		TREE

PROFILE LEGEND			PROFILE SCALE
		EXISTING GRADE AT CENTERLINE	0 5 10 20 HORIZONTAL 1" = 20'
		PROPOSED GRADE AT CENTERLINE	
		PROPOSED PIPE	
		PROPOSED BORE	
		PROPOSED STEEL ENCASEMENT	0 0.5 1 2 VERTICAL 1" = 2'
ELEVATION EXISTING GRADE AT CENTERLINE	101.5	ELEVATION PROPOSED INVERT AT CENTERLINE	102.39

811 Know what's below. Call before you dig.

NOTICE:
FOR YOUR SAFETY, YOU ARE REQUIRED BY TEXAS LAW TO CALL 811 AT LEAST 48 HOURS BEFORE YOU DIG SO THAT UNDERGROUND LINES CAN BE MARKED. THIS SIGNATURE DOES NOT FULFULL YOUR OBLIGATION TO CALL 811.

VERIFICATION OF PRIVATE UTILITY LINES

DATE

CENTERPOINT ENERGY NATURAL GAS UTILITIES SHOWN. (GAS SERVICE LINES ARE NOT SHOWN). THIS SIGNATURE NOT TO BE USED FOR CONFLICT VERIFICATION.
SIGNATURE VALID FOR SIX MONTHS.

DATE

CENTERPOINT ENERGY/UNDERGROUND ELECTRICAL FACILITIES VERIFICATION ONLY.
(THIS SIGNATURE VERIFIES EXISTING UNDERGROUND FACILITIES - NOT TO BE USED FOR CONFLICT VERIFICATION.)
SIGNATURE VALID FOR SIX MONTHS.

DATE

APPROVED FOR AT&T TEXAS/SWBT UNDERGROUND CONDUIT FACILITIES ONLY.
SIGNATURE VALID FOR ONE YEAR.

CONTACT CENTERPOINT ENERGY AT 713-207-2222 TO ARRANGE FOR LINES TO BE TURNED OFF OR MOVED.

FOR YOUR SAFETY, YOU ARE REQUIRED BY TEXAS LAW TO CALL 811 AT LEAST 48 HOURS BEFORE YOU DIG SO THAT UNDERGROUND LINES CAN BE MARKED. THE SIGNATURES BELOW DO NOT FULLFILL YOUR OBLIGATION TO CALL 811.

THE SIGNATURES BELOW ARE NOT TO BE USED FOR CONFLICT VERIFICATION.

CITY OF JERSEY VILLAGE FIRE DEPARTMENT DATE

JERSEY VILLAGE PUBLIC WORKS DEPARTMENT DATE

garza EMC
7708 Rialto Blvd., Suite 125
Austin, Texas 78735
Tel: (512) 298-3284 Fax: (512) 298-2592
TBPE # F-14629

Garza EMC, LLC © Copyright 2024

CITY OF JERSEY VILLAGE
A TEXAS STAR COMMUNITY

BILAL A. ALIZAI
92792
LICENSED
PROFESSIONAL
ENGINEER
05-17-2024

WATER LINE A
PLAN & PROFILE
STA. 31+50 TO 36+00

CONGO LANE RECONSTRUCTION, UTILITY & DRAINAGE IMPROVEMENTS

CITY OF JERSEY VILLAGE

DRAWN BY:	DESIGNED BY:	QA / QC:	PROJECT NO.:
CM, RC	BAA, PG	BAA	113756-00002

SHEET 52 OF 67

V:\113756-00002\Civil\00-CAD\113756-00002-WTR 6.dwg modified by rchiaro on May 17, 24 7:25 AM

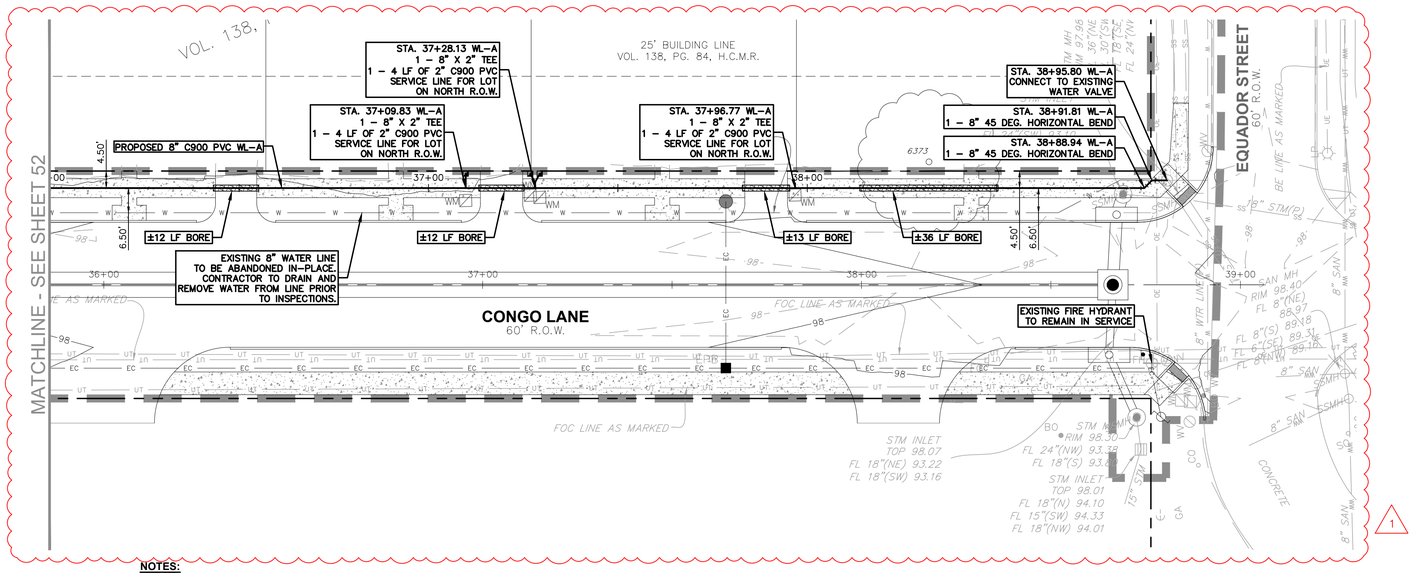

NOTES:

1. CAUTION!!! UNDERGROUND UTILITIES PRESENT IN THE PROJECT AREA. CONTRACTOR MUST USE CAUTION FOR UTILITY CROSSINGS WITH PROPOSED WATER, DRAINAGE AND ROADWAY IMPROVEMENTS. IF THERE ARE UTILITY CONFLICTS OR DISCREPANCIES BETWEEN SURVEY DATA AND FIELD WORK DURING CONSTRUCTION, CONTRACTOR SHALL INFORM THE ENGINEER PRIOR TO PROCEEDING WITH WORK. ENGINEER IS NOT RESPONSIBLE FOR DEPICTING THE EXACT LOCATION OF UNDERGROUND UTILITIES THAT ARE NOT REFLECTED IN THE FIELD SURVEY.
2. CONTRACTOR SHALL COORDINATE WITH CENTERPOINT ENERGY GAS SERVICES, TO ADJUST GAS SERVICE LINES WITHIN THE R.O.W. FOR THE CONSTRUCTION OF THE PROPOSED INFRASTRUCTURE INCLUDING UNDERGROUND WATER AND STORM SEWER LINES. GAS SERVICE LINES TO BE PLACED WITH A MINIMUM OF 24" CLEARANCE FROM ANY PROPOSED UTILITY WITHIN THE R.O.W.
3. FOR FIELD ADJUSTMENTS NEEDED TO UNDERGROUND TELECOMMUNICATIONS OR FIBER OPTIC CABLES AND CONDUITS, CONTRACTOR SHALL COORDINATE WITH SERVICE PROVIDER PRIOR TO MAKING ANY ADJUSTMENTS TO THEIR LINES.
4. CONTRACTOR IS RESPONSIBLE TO FIELD VERIFY ALL EXISTING UNDERGROUND UTILITIES, COMMUNICATION, GAS AND ELECTRICAL LINES PRIOR TO COMMENCING ANY CONSTRUCTION WORK.
5. EXISTING WATER LINES SHALL BE BE CUT, PLUGGED AND ABANDONED IN-PLACE AFTER SERVICES ARE TRANSFERRED FROM THE EXISTING WATER LINES TO THE PROPOSED WATER LINE.
6. PROPOSED 8" WATER LINE ALONG CONGO LANE TO BE INSTALLED BY TRENCH AND BORED WHEN CROSSING TREE CRITICAL ROOT ZONES AND DRIVEWAYS. SEE PLAN FOR BORE LOCATIONS.
7. CONTRACTOR SHALL REMOVE, SALVAGE, RELOCATE AND REINSTALL EXISTING WATER METERS IN NEW BOXES AS NECESSARY TO MAKE NEW SERVICE CONNECTIONS. CONTRACTOR IS RESPONSIBLE FOR DAMAGE TO METER BOXES AND METERS DURING CONSTRUCTION.
8. FOR RESIDENTIAL LOTS WITH 2 METERS (DOMESTIC & IRRIGATION) CONTRACTOR SHALL PROVIDE 2 SEPARATE SERVICE CONNECTIONS TO RETAIN 2 METERS.
9. FOR LOTS WITH ONE METER LOCATED AWAY FROM THE OTHER METER'S FOR NEIGHBORING LOT, USE 1" X 8" TEE TO SERVICE SINGLE METER CONNECTION.
10. FOR METERS DAMAGED DURING CONSTRUCTION, CONTRACTOR SHALL REPLACE WITH 3/4" CITY METER AT CONTRACTOR'S EXPENSE.

WATERLINE A

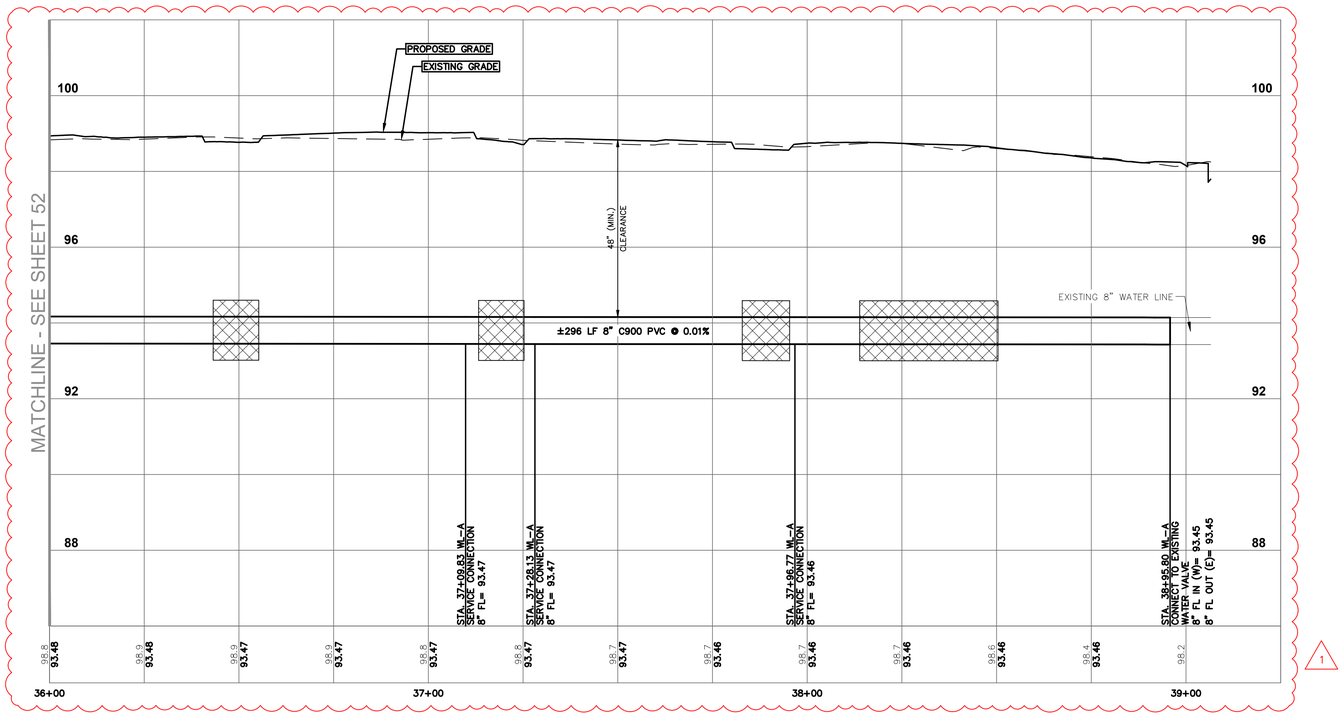

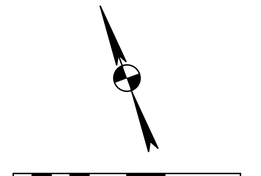

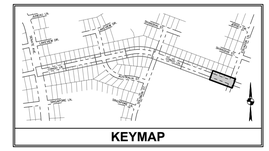

KEYMAP

PLAN LEGEND

EXISTING	PROPOSED	DESCRIPTION
		PROPERTY LINE / R.O.W. LINE
LP		LIGHT POLE
PP		POWER POLE
GAE		GUY ANCHOR
	EPB	ELECTRIC PULL BOX
FH		FIRE HYDRANT
WV		WATER VALVE
WM		WATER METER
FDC		FIRE DEPARTMENT CONNECTION
GM		GAS METER
GV		GAS VALVE
		GRATE INLET
		CURB INLET (SIZE VARIES)
SSMH		STORM MANHOLE (SIZE VARIES)
		STORM JUNCTION BOX (SIZE VARIES)
SSMH		WASTEWATER MANHOLE (SIZE VARIES)
COs		WASTEWATER CLEANOUT
SS		STORMSEWER LINE
W		WATER LINE
		WATER LINE BORE
WW		WASTEWATER LINE
G		GAS LINE
UE		UNDERGROUND ELECTRIC LINE
OE		OVERHEAD ELECTRIC LINE
UT		UNDERGROUND TELEPHONE LINE
	EC	ELECTRIC CONDUIT
		LIMITS OF CONSTRUCTION
100	100	CONTOUR
1311		TREE

PROFILE LEGEND		PROFILE SCALE
	EXISTING GRADE AT CENTERLINE	0 5 10 20 HORIZONTAL 1" = 20'
	PROPOSED GRADE AT CENTERLINE	
	PROPOSED PIPE	
	PROPOSED BORE	
	PROPOSED STEEL ENCASEMENT	0 0.5 1 2 VERTICAL 1" = 2'
ELEVATION EXISTING GRADE AT CENTERLINE 101.5	ELEVATION PROPOSED INVERT AT CENTERLINE 102.39	

811 Know what's below. Call before you dig.

NOTICE:
FOR YOUR SAFETY, YOU ARE REQUIRED BY TEXAS LAW TO CALL 811 AT LEAST 48 HOURS BEFORE YOU DIG SO THAT UNDERGROUND LINES CAN BE MARKED. THIS SIGNATURE DOES NOT FULFULL YOUR OBLIGATION TO CALL 811.

VERIFICATION OF PRIVATE UTILITY LINES

DATE

CENTERPOINT ENERGY NATURAL GAS UTILITIES SHOWN. (GAS SERVICE LINES ARE NOT SHOWN). THIS SIGNATURE NOT TO BE USED FOR CONFLICT VERIFICATION.
SIGNATURE VALID FOR SIX MONTHS.

DATE

CENTERPOINT ENERGY/UNDERGROUND ELECTRICAL FACILITIES VERIFICATION ONLY.
(THIS SIGNATURE VERIFIES EXISTING UNDERGROUND FACILITIES - NOT TO BE USED FOR CONFLICT VERIFICATION.)
SIGNATURE VALID FOR SIX MONTHS.

DATE

APPROVED FOR AT&T TEXAS/SWBT UNDERGROUND CONDUIT FACILITIES ONLY.
SIGNATURE VALID FOR ONE YEAR.

CONTACT CENTERPOINT ENERGY AT 713-207-2222 TO ARRANGE FOR LINES TO BE TURNED OFF OR MOVED.

FOR YOUR SAFETY, YOU ARE REQUIRED BY TEXAS LAW TO CALL 811 AT LEAST 48 HOURS BEFORE YOU DIG SO THAT UNDERGROUND LINES CAN BE MARKED. THE SIGNATURES BELOW DO NOT FULLFILL YOUR OBLIGATION TO CALL 811.

THE SIGNATURES BELOW ARE NOT TO BE USED FOR CONFLICT VERIFICATION.

CITY OF JERSEY VILLAGE FIRE DEPARTMENT DATE

JERSEY VILLAGE PUBLIC WORKS DEPARTMENT DATE

NO.	DATE	REVISION
1	05/17/2024	REVISED FIRE HYDRANT LOCATION, UPDATED CALLOUTS, ADDED NOTE

garza EMC
7708 Rialto Blvd., Suite 125
Austin, Texas 78735
Tel. (512) 298-3284 Fax (512) 298-2592
TBPE # F-14629

Garza EMC, LLC © Copyright 2024

CITY OF JERSEY VILLAGE
A TEXAS STAR COMMUNITY

BILAL A. ALIZAI
92792
LICENSED
PROFESSIONAL
ENGINEER
05-17-2024

WATER LINE A
PLAN & PROFILE
STA. 36+00 TO END

CONGO LANE RECONSTRUCTION, UTILITY & DRAINAGE IMPROVEMENTS

CITY OF JERSEY VILLAGE

DRAWN BY: CM, RC
DESIGNED BY: BAA, PG
QA / QC: BAA
PROJECT NO.: 113756-00002

SHEET 53 OF 67

V:\113756-00002\Civil\00-CAD\113756-00002-WTR 7.dwg modified by rchairo on May 17, 24 7:26 AM

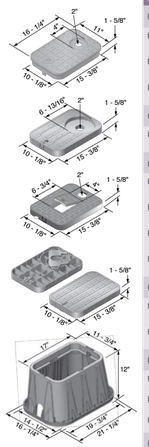

2-1/2" x 3-1/4" Pipe Slots

Part No.	Description - Marking	Color (Box/Cover)	Pallet Qty.	Wt. Ea. lbs.	Product Class
Drop-in Box & Cover					
D12-BAMR	14" x 19" x 12" Box, Drop-in Locking Solid Plastic, Single Bottom Mount AMR Bracket Cover - Water Meter	Black/Black	72	8.90	20ME
D12-TAMR	14" x 19" x 12" Box, Drop-in Locking Solid Plastic, Single 2" AMR/TR Hole w/ 7" Top Recess Cover - Water Meter	Black/Black	72	9.22	20ME
D1200-DITR	14" x 19" x 12" Box, Drop-in Solid Plastic, Single 2" AMR/TR Hole Cover - Water Meter	Black/Black	72	9.00	20ME
Overlapping Box & Cover					
D1200-OLTR	14" x 19" x 12" Box, Overlapping Solid Plastic, Single 2" AMR/TR Hole Cover - Water Meter	Black/Black	72	9.20	20ME
Drop-in Cover Only					
D12-BAMRL	14" x 19" Drop-in Locking Solid Plastic, Single Bottom Mount AMR Bracket Cover - Water Meter	Black	100	2.10	20ME
D12-TAMRL	14" x 19" Drop-in Locking Solid Plastic, Single 2" AMR/TR Hole w/ 7" Top Recess Cover - Water Meter	Black	100	2.42	20ME
D1200-DITRL	14" x 19" Drop-in Solid Plastic, Single 2" AMR/TR Hole Cover - Water Meter	Black	100	2.20	20ME
D12-TAMRBLUL	12" x 17" AMR Top Mount Locking Lid	Blue	100	2.42	20ME
Overlapping Cover Only					
D12AMR-OLLOCL	14" x 19" Overlapping Solid Plastic, Single 4" Top Recess Cover - Water Meter	Black	100	2.80	20ME
D12AMR-OLLOCTRL	14" x 19" Overlapping Solid Plastic, Single 1.75" AMR/TR Hole w/ 4" Top Recess Cover - Water Meter	Black	100	2.80	20ME
Box Only					
D1200-B/O	14" x 19" x 12" Box	Black	72	6.80	20ME
D600E-EXT	14" x 19" x 6" Extension	Black	42	4.20	20ME
D1800-B/O	14" x 19" x 18" Box	Black	48	10.00	20ME
Box with Overlapping Cover					
D600E-DISG	12" x 6" Extension Drop-in Solid Plastic Cover	Black/Green	42	6.40	20ME
D600PS-DISG	12" x 6" Extension Drop-in Solid Plastic Cover	Purple	42	6.60	20ME

NDS 13" x 20" JUMBO BOXES & AMR COVERS

(NOT TO SCALE)

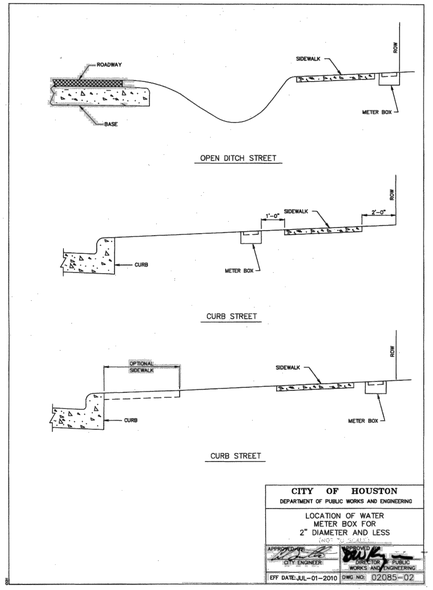

CITY OF HOUSTON
DEPARTMENT OF PUBLIC WORKS AND ENGINEERING
LOCATION OF WATER METER BOX FOR 2" DIAMETER AND LESS
(NOT TO SCALE)
APPROVED BY: CITY ENGINEER — DIRECTOR OF PUBLIC WORKS AND ENGINEERING
EFF DATE: JUL-01-2010 DWG NO: 02085-02

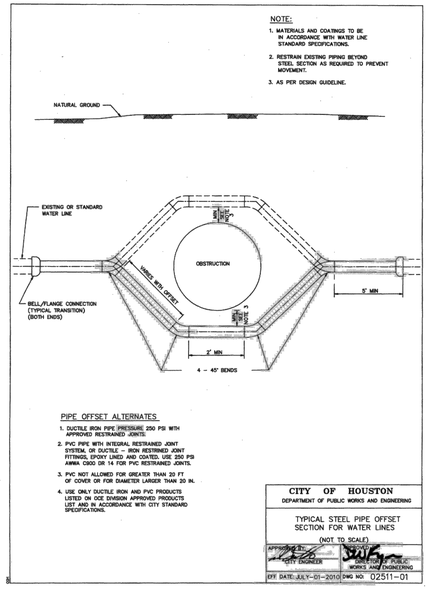

CITY OF HOUSTON
DEPARTMENT OF PUBLIC WORKS AND ENGINEERING
TYPICAL STEEL PIPE OFFSET SECTION FOR WATER LINES
(NOT TO SCALE)
APPROVED BY: CITY ENGINEER — DIRECTOR OF PUBLIC WORKS AND ENGINEERING
EFF DATE: JULY-01-2010 DWG NO: 02511-01

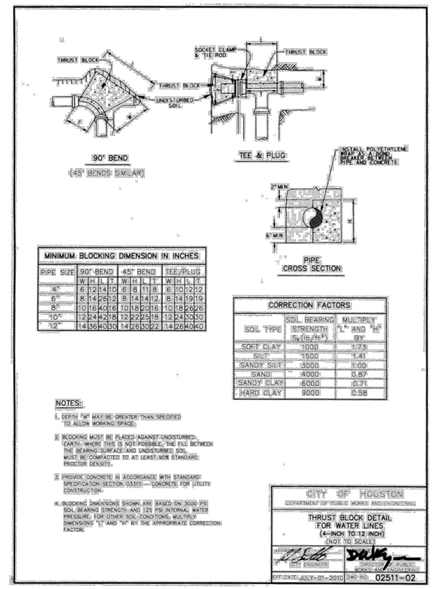

MINIMUM BLOCKING DIMENSION IN INCHES:

PIPE SIZE	90° BEND			45° BEND			TEE/PLUG		
	W	H	L	T	W	H	L	T	W	H	L	T
4"	6	12	14	10	6	8	11	8	6	10	12	12
6"	8	14	26	12	8	14	24	12	8	14	19	19
8"	10	16	40	16	10	18	29	16	10	18	26	26
10"	12	24	57	18	12	22	35	18	12	24	35	35
12"	14	36	80	30	14	26	50	22	14	26	40	40

CORRECTION FACTORS:

SOIL TYPE	SOIL BEARING STRENGTH S_b (lb/ft²)	MULTIPLY "L" AND "H" BY:
SOFT CLAY	1000	1.73
SILT	1500	1.41
SANDY SILT	3000	1.00
SAND	4000	0.87
SANDY CLAY	6000	0.71
HARD CLAY	9000	0.58

NOTES:
1. DEPTH "H" MAY BE GREATER THAN SPECIFIED TO ALLOW WORKING SPACE.
2. BLOCKING MUST BE PLACED AGAINST UNDISTURBED EARTH. WHERE THIS IS NOT POSSIBLE, THE FILL BETWEEN THE BEARING SURFACE AND UNDISTURBED SOIL MUST BE COMPACTED TO AT LEAST 90% STANDARD PROCTOR DENSITY.
3. PROVIDE CONCRETE IN ACCORDANCE WITH STANDARD SPECIFICATION SECTION 03305 — CONCRETE FOR UTILITY CONSTRUCTION.
4. BLOCKING DIMENSIONS SHOWN ARE BASED ON 3000 PSI SOIL BEARING STRENGTH AND 125 PSI INTERNAL WATER PRESSURE. FOR OTHER SOIL CONDITIONS, MULTIPLY DIMENSIONS "L" AND "H" BY THE APPROPRIATE CORRECTION FACTOR.

CITY OF HOUSTON
DEPARTMENT OF PUBLIC WORKS AND ENGINEERING
THRUST BLOCK DETAIL FOR WATER LINES (4-INCH TO 12 INCH)
(NOT TO SCALE)
APPROVED BY: CITY ENGINEER — DIRECTOR OF PUBLIC WORKS AND ENGINEERING
EFF DATE: JULY-01-2010 DWG NO: 02511-02

NOTE:
1) APPROXIMATE WEIGHTS:
FRAME = 46 LBS
COVER = 10 LBS
2) MATERIAL = GRAY IRON ASTM A48 CL35B

CITY OF HOUSTON
DEPARTMENT OF PUBLIC WORKS AND ENGINEERING
VALVE BOX DETAIL
(NOT TO SCALE)
APPROVED BY: CITY ENGINEER — DIRECTOR OF PUBLIC WORKS AND ENGINEERING
EFF DATE: JULY 01, 2010 DWG NO: 02085-03

CITY OF HOUSTON
DEPARTMENT OF PUBLIC WORKS AND ENGINEERING
WATER DISTRIBUTION MAIN BEDDING AND BACKFILL FOR OPEN CUT TRENCHES
(NOT TO SCALE)
APPROVED BY: CITY ENGINEER — DIRECTOR OF PUBLIC WORKS AND ENGINEERING
EFF DATE: JUL-01-2010 DWG NO: 02317-04

PIPE TAPPING SCHEDULE

WATER MAIN TYPE AND DIAMETER	SERVICE SIZE 3/4"	1"	1 1/2"	2"
4" CAST IRON OR DUCTILE IRON	DSS, WSSS	DSS, WSSS	DSS, WSSS	DSS, WSSS
4" ASBESTOS (EXISTING) CEMENT	WSSS	WSSS	DSS, WSSS	DSS, WSSS
6" PVC (AWWA-C900)	DSS, WSSS	DSS, WSSS	DSS, WSSS	DSS, WSSS
6" AND 8" CAST IRON OR DUCTILE IRON	DSS, WSSS	DSS, WSSS	DSS, WSSS	DSS, WSSS
6" AND 8" ASBESTOS (EXISTING) CEMENT	DSS, WSSS	DSS, WSSS	DSS, WSSS	DSS, WSSS
8" AND 12" CAST IRON OR DUCTILE IRON	DSS, WSSS	DSS, WSSS	DSS, WSSS	DSS, WSSS
8" AND 12" PVC (AWWA C900)	DSS, WSSS	DSS, WSSS	DSS, WSSS	DSS, WSSS
12" CAST IRON OR DUCTILE IRON	DSS, WSSS	DSS, WSSS	DSS, WSSS	DSS, WSSS
12" ASBESTOS (EXISTING) CEMENT	DSS, WSSS	DSS, WSSS	DSS, WSSS	DSS, WSSS
12" PVC (AWWA C900)	DSS, WSSS	DSS, WSSS	DSS, WSSS	DSS, WSSS
16" AND UP CAST IRON OR DUCTILE IRON	DWSSS	DWSSS	DWSSS	DWSSS
16" AND UP ASBESTOS (EXISTING) CEMENT	DWSSS	DWSSS	DWSSS	DWSSS
16" AND UP PVC (AWWA C900)	DWSSS	DWSSS	DWSSS	DWSSS

DSS — DUAL STRAP SADDLES
WSSS — WIDE BAND STRAP SADDLES
DWSSS — DUAL WIDE BAND STRAP SADDLES

CITY OF HOUSTON
DEPARTMENT OF PUBLIC WORKS AND ENGINEERING
SERVICE TAPS
(NOT TO SCALE)
APPROVED BY: CITY ENGINEER — DIRECTOR OF PUBLIC WORKS AND ENGINEERING
EFF DATE: JUL-01-2010 DWG NO: 02512-02

NOTES:
1. LOCATE FIRE HYDRANTS AT POINT OF CURVATURE (PC) OR POINT OF TANGENCY (PT) OF THE INTERSECTION CURB RADIUS, 3 FEET BEHIND CURB OR PROJECTED FUTURE CURB.
2. ON OPEN-DITCH ROADWAYS, SET THE FIRE HYDRANTS WITH IN 5 FEET OF RIGHT-OF-WAY LINES.
3. FIRE HYDRANT STEAMER NOZZLE SHALL FACE THE STREET.
4. LOCATE HYDRANT VALVE IMMEDIATELY ADJACENT TO WATER LINE.
5. ALL PIPING TO BE RESTRAINED JOINTS.

CITY OF HOUSTON
HOUSTON PUBLIC WORKS
STANDARD FIRE HYDRANT DETAIL
(NOT TO SCALE)
APPROVED BY: CITY ENGINEER — APPROVED BY: DIRECTOR OF HOUSTON PUBLIC WORKS
EFF DATE: JUL-01-2021 DWG NO. 02520-01

WATER SERVICE METER DETAILS

(NOT TO SCALE)

NOTE:
1. CONTRACTOR TO CUT & PLUG ALL EXISTING WATER LINES (WHICH ARE TO BE ABANDONED IN-PLACE) ON BOTH SIDES WHEN INTERSECTING PROPOSED WATER SERVICES LEADING FROM WATER MAIN TO LOTS.

WATER LINE ABANDONMENT DETAIL

(NOT TO SCALE)

811 Know what's below. Call before you dig.

REVISION | NO. | DATE

garza EMC, LLC
7708 Rialto Blvd., Suite 125
Austin, Texas 78735
Tel: (512) 298-3284 Fax: (512) 298-2592
TBPE # F-14629
Garza EMC, LLC © Copyright 2024

CITY OF JERSEY VILLAGE — A TEXAS STAR COMMUNITY

BILAL A. ALIZAI 92792 LICENSED PROFESSIONAL ENGINEER
03-22-2024

WATER DETAILS

CONGO LANE RECONSTRUCTION, UTILITY & DRAINAGE IMPROVEMENTS

CITY OF JERSEY VILLAGE

DRAWN BY: CM, RC
DESIGNED BY: BAA, PG
QA / QC: BAA
PROJECT NO.: 113756-00002

SHEET 54 OF 67

V:\113756-00002\Civil\00-CAD\113756-00002-WTR-DTL 1.dwg modified by rchiaro on Feb 22, 24 7:03 AM

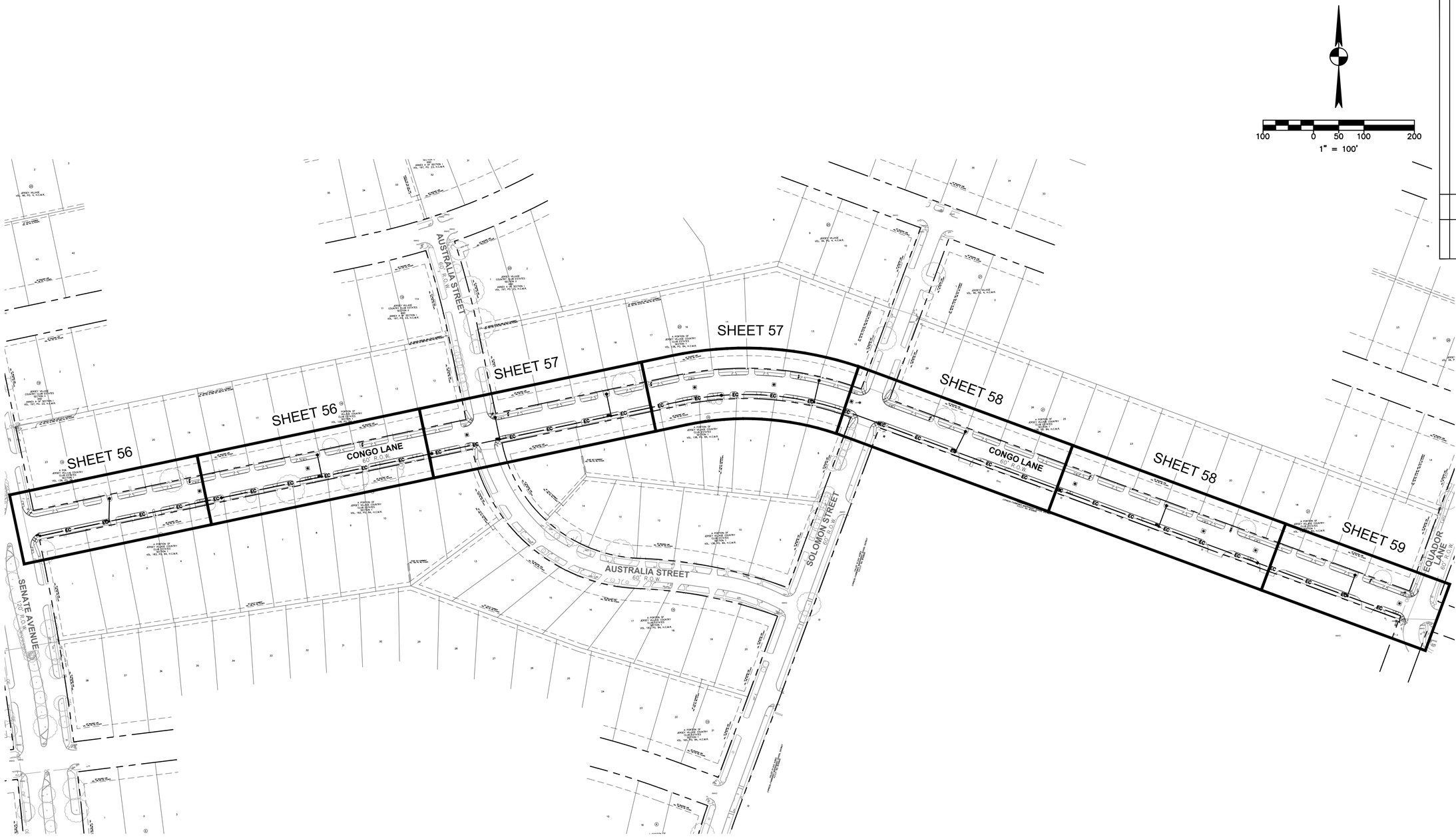

REVISION

NO.	DATE

garza EMC
7708 Rialto Blvd., Suite 125
Austin, Texas 78735
Tel. (512) 298-3284 Fax (512) 298-2592
TBPE # F-146629
Garza EMC, LLC © Copyright 2024

CITY OF JERSEY VILLAGE
A TEXAS STAR COMMUNITY

STATE OF TEXAS
BILAL A. ALIZAI
92792
LICENSED
PROFESSIONAL ENGINEER

03-22-2024

OVERALL STREET LIGHTING LAYOUT

CONGO LANE RECONSTRUCTION, UTILITY & DRAINAGE IMPROVEMENTS

CITY OF JERSEY VILLAGE

DRAWN BY:	CM, RC
DESIGNED BY:	BAA, PG
QA / QC:	BAA
PROJECT NO.:	113756-00002

SHEET
55
OF 67

811 Know what's below. Call before you dig.

V:\113756-00002\Civil\00-CAD\113756-00002-STLT 0.dwg modified by rchiaro on Feb 23, 24 12:32 PM

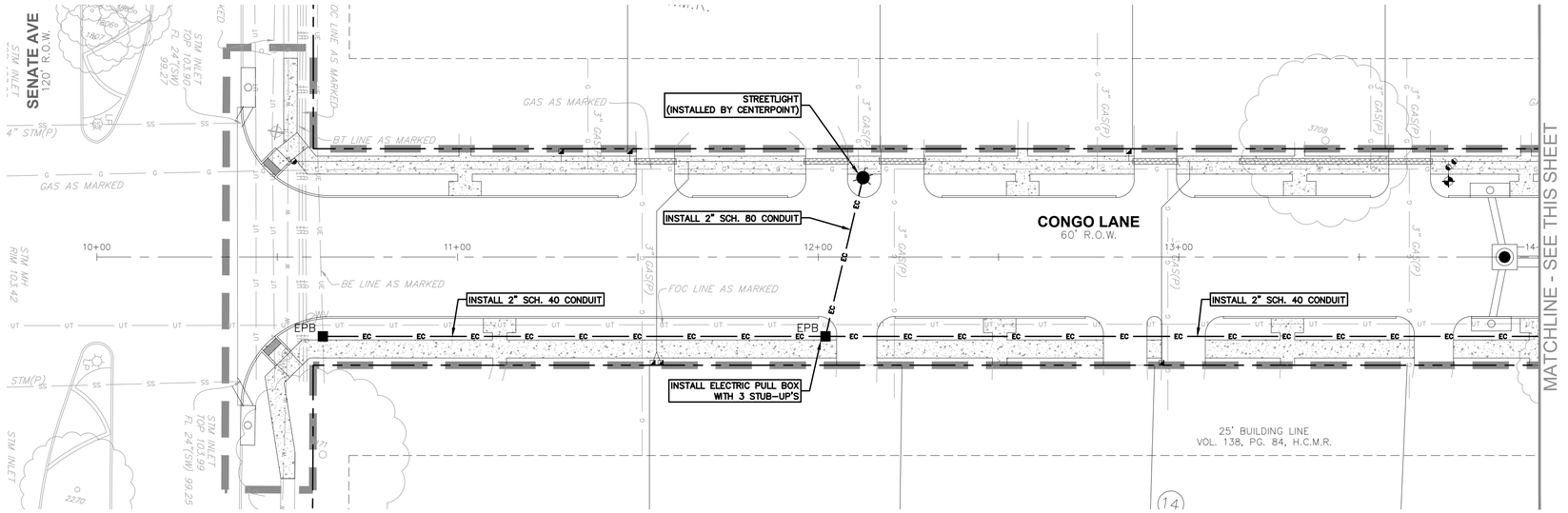

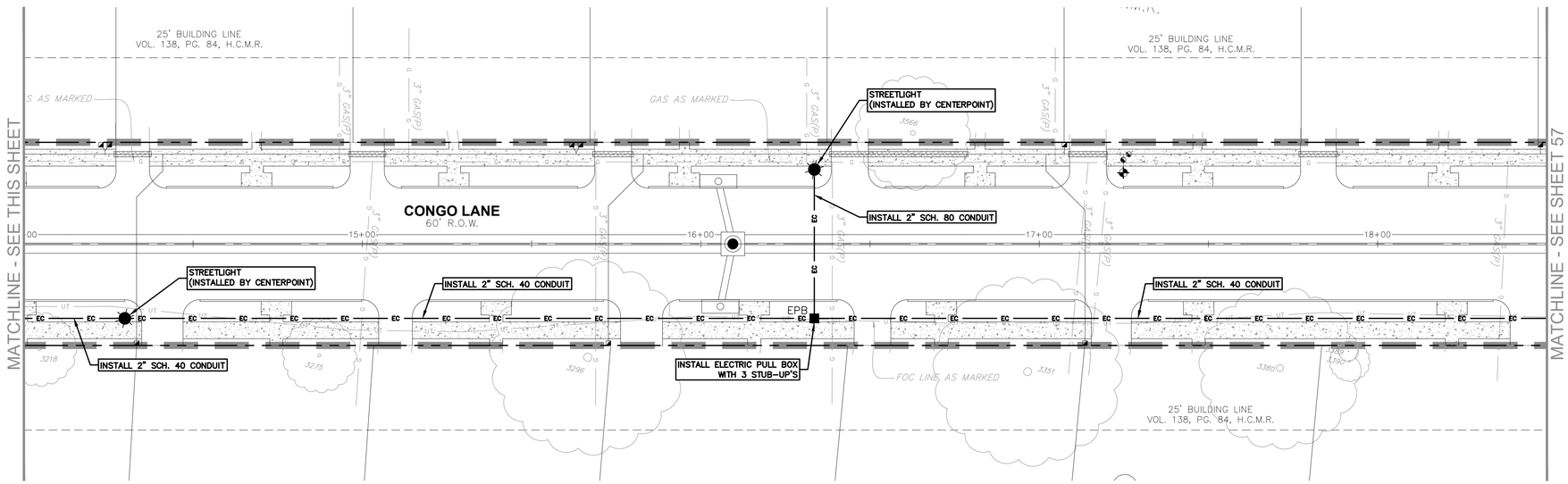

20 0 10 20 40

1" = 20'

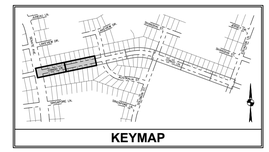

KEYMAP

PLAN LEGEND

EXISTING	PROPOSED	DESCRIPTION
		PROPERTY LINE / R.O.W. LINE
		LIGHT POLE
PP		POWER POLE
GA		DOWN GUY
TB		TELEPHONE BOX
TV		TELEPHONE VAULT
FO		FIBER OPTIC SIGN
UCS		UNDERGROUND CABLE SIGN
BO		BOLLARD
SO		STUB OUT
	EPB	ELECTRIC PULL BOX
		SIGN
FH		FIRE HYDRANT
WV		WATER VALVE
WM		WATER METER
FDC		FIRE DEPARTMENT CONNECTION
		GAS METER
		GAS VALVE
		GRATE INLET
		CURB INLET (SIZE VARIES)
SSMH		STORM MANHOLE (SIZE VARIES)
		STORM JUNCTION BOX (SIZE VARIES)
SSMH		WASTEWATER MANHOLE (SIZE VARIES)
CO		WASTEWATER CLEANOUT
SS		STORMSEWER LINE
W		WATER LINE
WW		WASTEWATER LINE
G		GAS LINE
UE		UNDERGROUND ELECTRIC LINE
OE		OVERHEAD ELECTRIC LINE
UT		UNDERGROUND TELEPHONE LINE
EC		ELECTRIC CONDUIT
		WATER LINE BORE
		CURB
		CONCRETE SIDEWALK
		LIMITS OF CONSTRUCTION
1111		TREE

811 Know what's below. Call before you dig.

NOTICE:
FOR YOUR SAFETY, YOU ARE REQUIRED BY TEXAS LAW TO CALL 811 AT LEAST 48 HOURS BEFORE YOU DIG SO THAT UNDERGROUND LINES CAN BE MARKED. THIS SIGNATURE DOES NOT FULFULL YOUR OBLIGATION TO CALL 811.

VERIFICATION OF PRIVATE UTILITY LINES

DATE

CENTERPOINT ENERGY NATURAL GAS UTILITIES SHOWN. (GAS SERVICE LINES ARE NOT SHOWN). THIS SIGNATURE NOT TO BE USED FOR CONFLICT VERIFICATION.
SIGNATURE VALID FOR SIX MONTHS.

DATE

CENTERPOINT ENERGY/UNDERGROUND ELECTRICAL FACILITIES VERIFICATION ONLY.
(THIS SIGNATURE VERIFIES EXISTING UNDERGROUND FACILITIES - NOT TO BE USED FOR CONFLICT VERIFICATION.)
SIGNATURE VALID FOR SIX MONTHS.

DATE

APPROVED FOR AT&T TEXAS/SWBT UNDERGROUND CONDUIT FACILITIES ONLY.
SIGNATURE VALID FOR ONE YEAR.

CONTACT CENTERPOINT ENERGY AT 713-207-2222 TO ARRANGE FOR LINES TO BE TURNED OFF OR MOVED.

FOR YOUR SAFETY, YOU ARE REQUIRED BY TEXAS LAW TO CALL 811 AT LEAST 48 HOURS BEFORE YOU DIG SO THAT UNDERGROUND LINES CAN BE MARKED. THE SIGNATURES BELOW DO NOT FULLFILL YOUR OBLIGATION TO CALL 811.

THE SIGNATURES BELOW ARE NOT TO BE USED FOR CONFLICT VERIFICATION.

CITY OF JERSEY VILLAGE FIRE DEPARTMENT DATE

JERSEY VILLAGE PUBLIC WORKS DEPARTMENT DATE

NO.	REVISION	DATE

garza EMC
7708 Rialto Blvd., Suite 125
Austin, Texas 78735
Tel. (512) 298-3284 Fax (512) 298-2592
TBPE # F-14629
Garza EMC, LLC © Copyright 2024

CITY OF JERSEY VILLAGE
A TEXAS STAR COMMUNITY

BILAL A. ALIZAI
92792
LICENSED
PROFESSIONAL ENGINEER
03-22-2024

STREET LIGHTING PLAN A

CONGO LANE RECONSTRUCTION, UTILITY & DRAINAGE IMPROVEMENTS

CITY OF JERSEY VILLAGE

DRAWN BY: CM, RC
DESIGNED BY: BAA, PG
QA / QC: BAA
PROJECT NO.: 113756-00002

SHEET 56 OF 67

V:\113756-00002\Civil\00-CAD\113756-00002-STLT 1.dwg modified by rchiaro on Feb 29, 24 11:04 AM

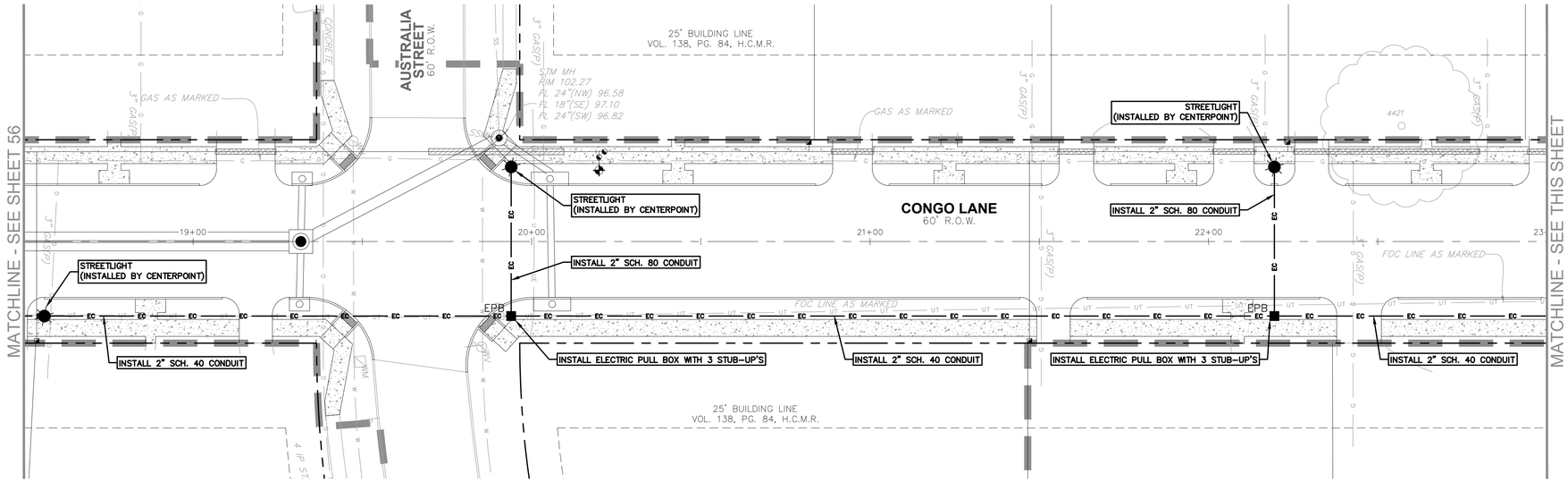

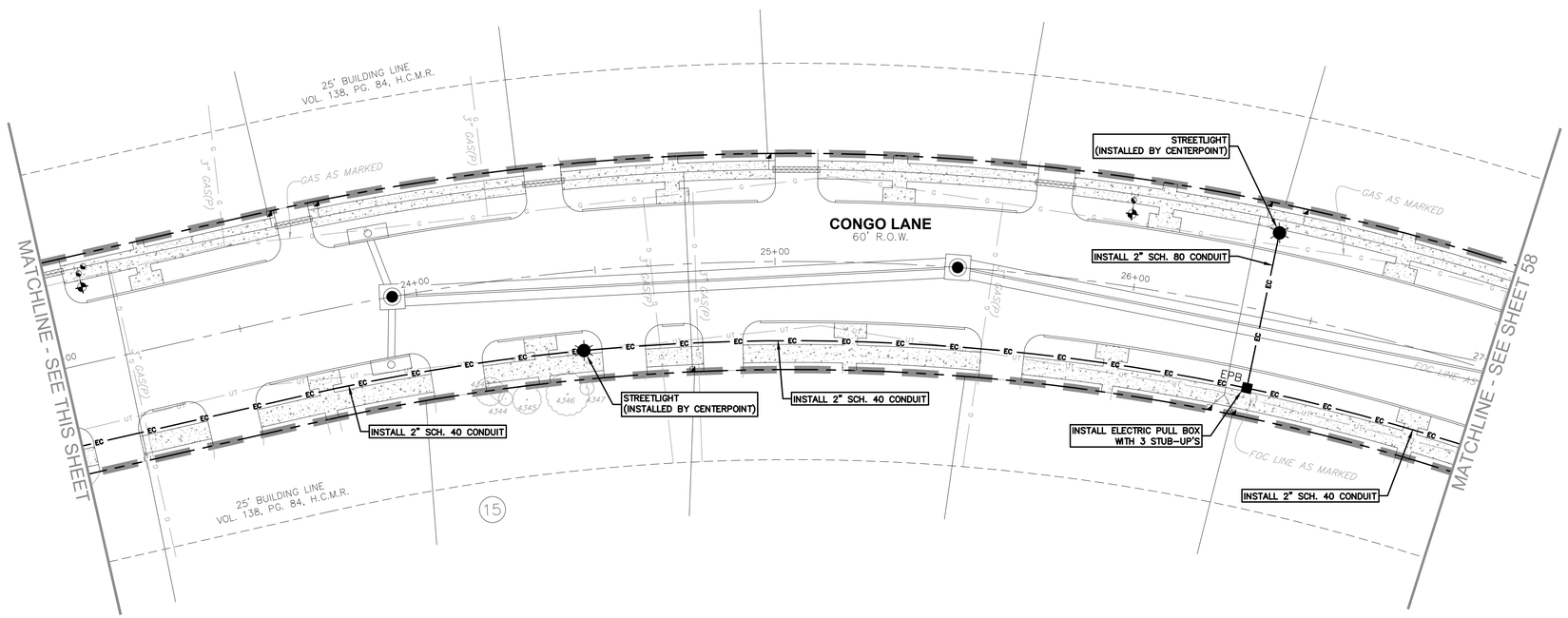

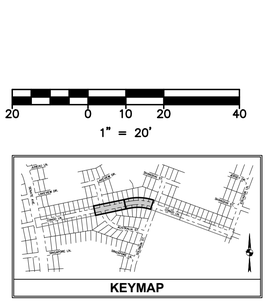

PLAN LEGEND

EXISTING	PROPOSED	DESCRIPTION
		PROPERTY LINE / R.O.W. LINE
PP		LIGHT POLE
GA		POWER POLE
		DOWN GUY
TP		TELEPHONE BOX
TV		TELEPHONE VAULT
FO		FIBER OPTIC SIGN
UCS		UNDERGROUND CABLE SIGN
		BOLLARD
SO		STUB OUT
	EPB	ELECTRIC PULL BOX
		SIGN
FH		FIRE HYDRANT
WV		WATER VALVE
WM		WATER METER
FDC		FIRE DEPARTMENT CONNECTION
		GAS METER
		GAS VALVE
		GRATE INLET
		CURB INLET (SIZE VARIES)
SSMH		STORM MANHOLE (SIZE VARIES)
		STORM JUNCTION BOX (SIZE VARIES)
SSMH		WASTEWATER MANHOLE (SIZE VARIES)
CO		WASTEWATER CLEANOUT
SS		STORMSEWER LINE
W		WATER LINE
WW		WASTEWATER LINE
G		GAS LINE
UE		UNDERGROUND ELECTRIC LINE
OE		OVERHEAD ELECTRIC LINE
UT		UNDERGROUND TELEPHONE LINE
EC		ELECTRIC CONDUIT
		WATER LINE BORE
		CURB
		CONCRETE SIDEWALK
		LIMITS OF CONSTRUCTION
1111		TREE

811 Know what's below. Call before you dig.

NOTICE:
FOR YOUR SAFETY, YOU ARE REQUIRED BY TEXAS LAW TO CALL 811 AT LEAST 48 HOURS BEFORE YOU DIG SO THAT UNDERGROUND LINES CAN BE MARKED. THIS SIGNATURE DOES NOT FULFULL YOUR OBLIGATION TO CALL 811.

VERIFICATION OF PRIVATE UTILITY LINES

DATE

CENTERPOINT ENERGY NATURAL GAS UTILITIES SHOWN. (GAS SERVICE LINES ARE NOT SHOWN). THIS SIGNATURE NOT TO BE USED FOR CONFLICT VERIFICATION.
SIGNATURE VALID FOR SIX MONTHS.

DATE

CENTERPOINT ENERGY/UNDERGROUND ELECTRICAL FACILITIES VERIFICATION ONLY.
(THIS SIGNATURE VERIFIES EXISTING UNDERGROUND FACILITIES - NOT TO BE USED FOR CONFLICT VERIFICATION.)
SIGNATURE VALID FOR SIX MONTHS.

DATE

APPROVED FOR AT&T TEXAS/SWBT UNDERGROUND CONDUIT FACILITIES ONLY.
SIGNATURE VALID FOR ONE YEAR.

CONTACT CENTERPOINT ENERGY AT 713-207-2222 TO ARRANGE FOR LINES TO BE TURNED OFF OR MOVED.

FOR YOUR SAFETY, YOU ARE REQUIRED BY TEXAS LAW TO CALL 811 AT LEAST 48 HOURS BEFORE YOU DIG SO THAT UNDERGROUND LINES CAN BE MARKED. THE SIGNATURES BELOW DO NOT FULLFILL YOUR OBLIGATION TO CALL 811.

THE SIGNATURES BELOW ARE NOT TO BE USED FOR CONFLICT VERIFICATION.

CITY OF JERSEY VILLAGE FIRE DEPARTMENT DATE

JERSEY VILLAGE PUBLIC WORKS DEPARTMENT DATE

NO.	REVISION	DATE

garza EMC, LLC
7708 Rialto Blvd., Suite 125
Austin, Texas 78735
Tel. (512) 298-3284 Fax (512) 298-2592
TBPE # F-14629
Garza EMC, LLC © Copyright 2024

CITY OF JERSEY VILLAGE
A TEXAS STAR COMMUNITY

BILAL A. ALIZAI
92792
LICENSED
PROFESSIONAL
ENGINEER

03-22-2024

STREET LIGHTING PLAN B

CONGO LANE RECONSTRUCTION, UTILITY & DRAINAGE IMPROVEMENTS

CITY OF JERSEY VILLAGE

DRAWN BY:	DESIGNED BY:	QA / QC:	PROJECT NO.:
CM, RC	BAA, PG	BAA	113756-00002

SHEET 57 OF 67

V:\113756-00002\Civil\00-CAD\113756-00002-STLT 2.dwg modified by rchiaro on Feb 29, 24 11:03 AM

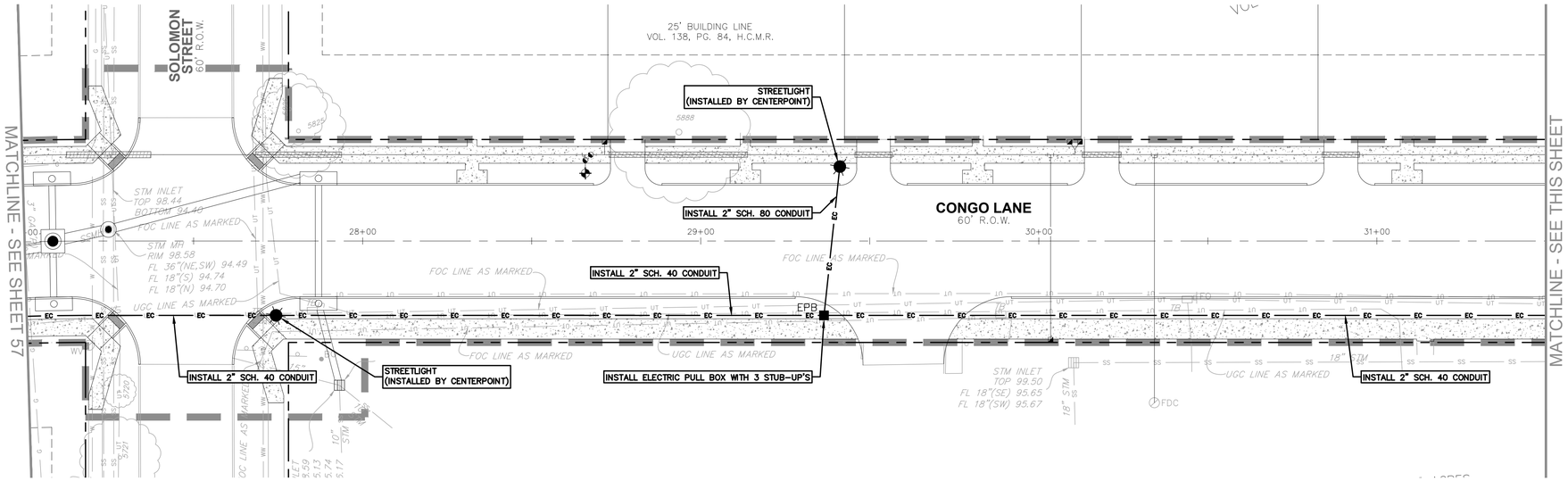

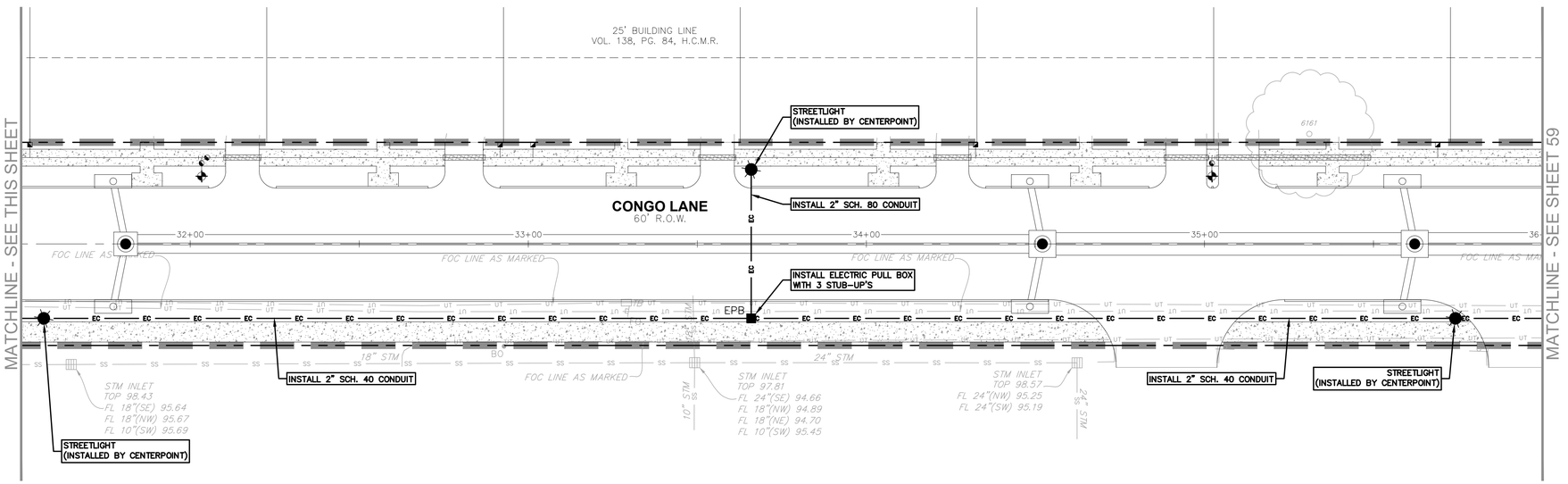

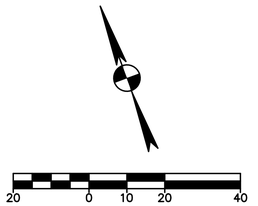

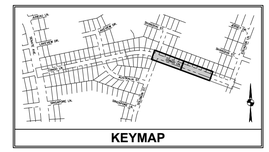

KEYMAP

PLAN LEGEND

EXISTING	PROPOSED	DESCRIPTION
		PROPERTY LINE / R.O.W. LINE
		LIGHT POLE
PP		POWER POLE
GA		DOWN GUY
TB		TELEPHONE BOX
TV		TELEPHONE VAULT
FO		FIBER OPTIC SIGN
UCS		UNDERGROUND CABLE SIGN
BO		BOLLARD
SO		STUB OUT
	EPB	ELECTRIC PULL BOX
		SIGN
FH		FIRE HYDRANT
WV		WATER VALVE
WM		WATER METER
FDC		FIRE DEPARTMENT CONNECTION
G		GAS METER
GV		GAS VALVE
		GRATE INLET
		CURB INLET (SIZE VARIES)
SSMH		STORM MANHOLE (SIZE VARIES)
		STORM JUNCTION BOX (SIZE VARIES)
SSMH		WASTEWATER MANHOLE (SIZE VARIES)
CO		WASTEWATER CLEANOUT
SS		STORMSEWER LINE
W		WATER LINE
WW		WASTEWATER LINE
G		GAS LINE
UE		UNDERGROUND ELECTRIC LINE
OE		OVERHEAD ELECTRIC LINE
UT		UNDERGROUND TELEPHONE LINE
EC		ELECTRIC CONDUIT
		WATER LINE BORE
		CURB
		CONCRETE SIDEWALK
		LIMITS OF CONSTRUCTION
		TREE

811 Know what's below. Call before you dig.

NOTICE:
FOR YOUR SAFETY, YOU ARE REQUIRED BY TEXAS LAW TO CALL 811 AT LEAST 48 HOURS BEFORE YOU DIG SO THAT UNDERGROUND LINES CAN BE MARKED. THIS SIGNATURE DOES NOT FULFULL YOUR OBLIGATION TO CALL 811.

VERIFICATION OF PRIVATE UTILITY LINES

DATE

CENTERPOINT ENERGY NATURAL GAS UTILITIES SHOWN. (GAS SERVICE LINES ARE NOT SHOWN). THIS SIGNATURE NOT TO BE USED FOR CONFLICT VERIFICATION.
SIGNATURE VALID FOR SIX MONTHS.

DATE

CENTERPOINT ENERGY/UNDERGROUND ELECTRICAL FACILITIES VERIFICATION ONLY.
(THIS SIGNATURE VERIFIES EXISTING UNDERGROUND FACILITIES - NOT TO BE USED FOR CONFLICT VERIFICATION.)
SIGNATURE VALID FOR SIX MONTHS.

DATE

APPROVED FOR AT&T TEXAS/SWBT UNDERGROUND CONDUIT FACILITIES ONLY.
SIGNATURE VALID FOR ONE YEAR.

CONTACT CENTERPOINT ENERGY AT 713-207-2222 TO ARRANGE FOR LINES TO BE TURNED OFF OR MOVED.

FOR YOUR SAFETY, YOU ARE REQUIRED BY TEXAS LAW TO CALL 811 AT LEAST 48 HOURS BEFORE YOU DIG SO THAT UNDERGROUND LINES CAN BE MARKED. THE SIGNATURES BELOW DO NOT FULLFILL YOUR OBLIGATION TO CALL 811.

THE SIGNATURES BELOW ARE NOT TO BE USED FOR CONFLICT VERIFICATION.

CITY OF JERSEY VILLAGE FIRE DEPARTMENT DATE

JERSEY VILLAGE PUBLIC WORKS DEPARTMENT DATE

NO.	REVISION	DATE

garza EMC
7708 Rialto Blvd., Suite 125
Austin, Texas 78735
Tel. (512) 298-3284 Fax (512) 298-2592
TBPE # F-14629

Garza EMC, LLC © Copyright 2024

CITY OF JERSEY VILLAGE, A TEXAS STAR COMMUNITY

LICENSED PROFESSIONAL ENGINEER
BILAL A. ALIZAI
92792
03-22-2024

STREET LIGHTING PLAN C

CONGO LANE RECONSTRUCTION, UTILITY & DRAINAGE IMPROVEMENTS

CITY OF JERSEY VILLAGE

DRAWN BY:	DESIGNED BY:	QA / QC:	PROJECT NO.:
CM, RC	BAA, PG	BAA	113756-00002

SHEET 58 OF 67

V:\113756-00002\Civil\00-CAD\113756-00002-STLT 3.dwg modified by rchiaro on Feb 29, 24 11:03 AM

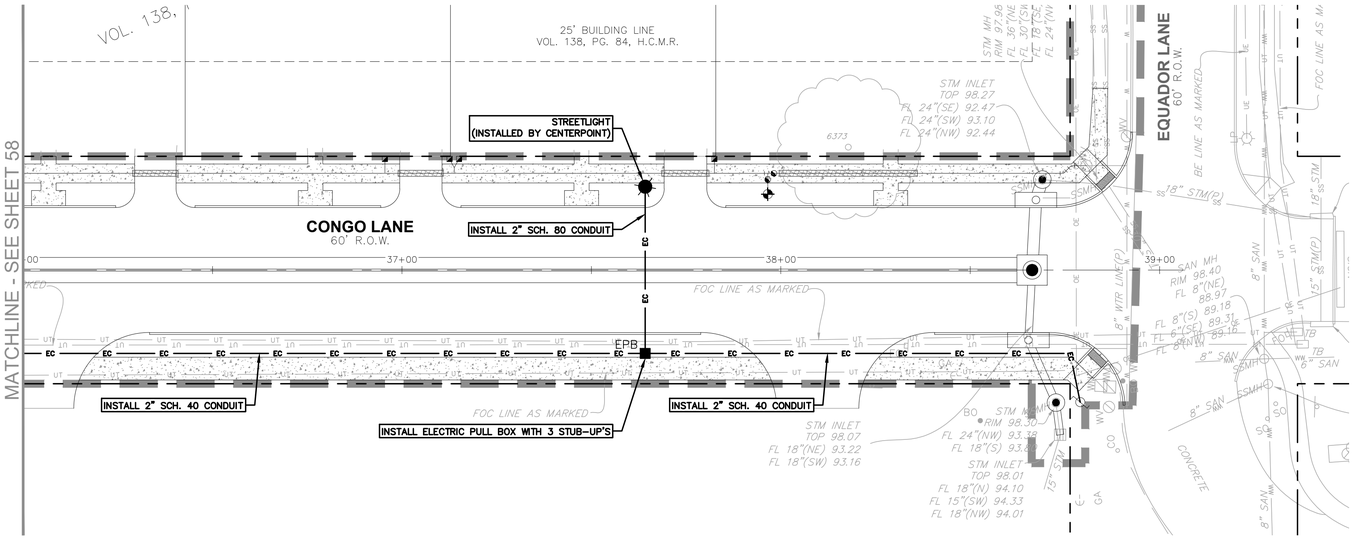

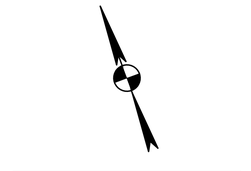

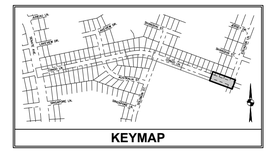

PLAN LEGEND

EXISTING	PROPOSED	DESCRIPTION
		PROPERTY LINE / R.O.W. LINE
		LIGHT POLE
		POWER POLE
		DOWN GUY
		TELEPHONE BOX
		TELEPHONE VAULT
		FIBER OPTIC SIGN
		UNDERGROUND CABLE SIGN
		BOLLARD
		STUB OUT
	EPB	ELECTRIC PULL BOX
		SIGN
		FIRE HYDRANT
		WATER VALVE
		WATER METER
		FIRE DEPARTMENT CONNECTION
		GAS METER
		GAS VALVE
		GRATE INLET
		CURB INLET (SIZE VARIES)
		STORM MANHOLE (SIZE VARIES)
		STORM JUNCTION BOX (SIZE VARIES)
		WASTEWATER MANHOLE (SIZE VARIES)
		WASTEWATER CLEANOUT
		STORMSEWER LINE
		WATER LINE
		WASTEWATER LINE
		GAS LINE
		UNDERGROUND ELECTRIC LINE
		OVERHEAD ELECTRIC LINE
		UNDERGROUND TELEPHONE LINE
	EC	ELECTRIC CONDUIT
		WATER LINE BORE
		CURB
		CONCRETE SIDEWALK
		LIMITS OF CONSTRUCTION
		TREE

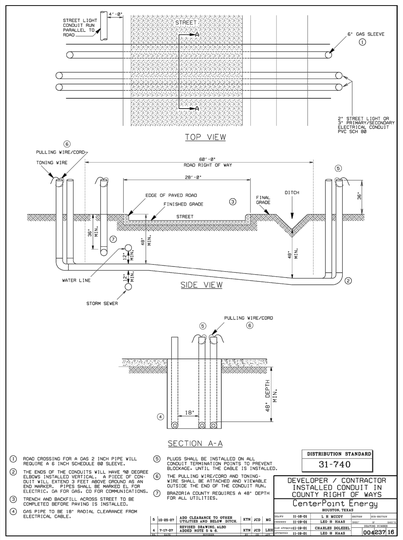

1. ROAD CROSSING FOR A GAS 2 INCH PIPE WILL REQUIRE A 6 INCH SCHEDULE 80 SLEEVE.
2. THE ENDS OF THE CONDUITS WILL HAVE 90 DEGREE ELBOWS INSTALLED VERTICAL. A PIECE OF CONDUIT WITH A COUPLING WILL BE INSTALLED ON THE END WHERE IT WILL BE MARKED E, FOR ELECTRIC. SA FOR GAS, CO FOR COMMUNICATIONS.
3. TRENCH AND BACKFILL ACROSS STREET TO BE COMPLETED BEFORE PAVING IS INSTALLED.
4. GAS PIPE TO BE 18" RADIAL CLEARANCE FROM ELECTRICAL CABLE.
5. PLUGS SHALL BE INSTALLED ON ALL CONDUIT TERMINATION POINTS TO PREVENT BLOCKAGE, UNTIL THE CABLE IS INSTALLED.
6. THE PULLING WIRE/CORD AND TONING WIRE SHALL BE LEFT IN ALL CONDUITS FROM OUTSIDE TO THE END OF THE CONDUIT RUN.
7. BRAZORIA COUNTY REQUIRES A 48" DEPTH FOR ALL UTILITIES.

DISTRIBUTION STANDARD
31-740

DEVELOPER / CONTRACTOR INSTALLED CONDUIT IN COUNTY RIGHT OF WAYS

CenterPoint Energy
HOUSTON, TEXAS

B	10-09-01	ADD CLEARANCE TO GREEN SPACE, ADD NOTE 7, REVISED SHEET NO.	STP/ JCG	MC	
A	11-01-01	CHANGED NOTE 5 & 6.	STP/ JCG	MC	

DRAWN	12-18-18	S. R. MOODY			
CHECKED	12-20-18	JAMES C. DAVIS			
APPROVED	12-20-18	CHARLIE RIVERS			
LEAD ENGINEER		LEO B. HAAS			

1042316

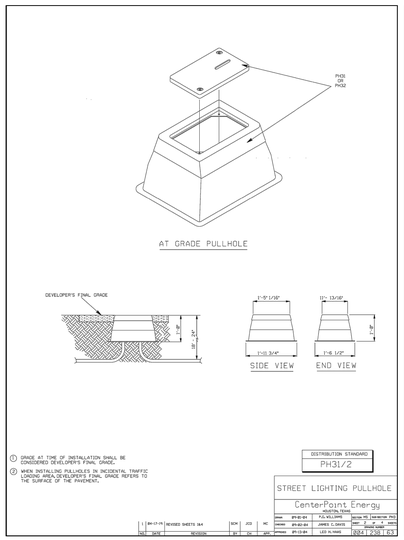

1. GRADE AT TIME OF INSTALLATION SHALL BE CONSIDERED DEVELOPER'S FINAL GRADE.
2. WHEN INSTALLING PULLHOLES IN INCIDENTAL TRAFFIC LOADING AREA,DEVELOPER'S FINAL GRADE REFERS TO THE SURFACE OF THE PAVEMENT.

1	04-17-15	REVISED SHEETS 3&4	SCH	JCG	MC
NO.	DATE	REVISION	BY	CK	APP

DISTRIBUTION STANDARD
PH31/2

STREET LIGHTING PULLHOLE
HIGH DENSITY AREA

CenterPoint Energy
HOUSTON, TEXAS

DRAWN	01-02-01	P.G. WILLIAMS	SIGNAL TECHNICIAN PH3
DESIGNED	01-02-01	JAMES C. DAVIS	DATE 01-02-01
APPROVED	01-02-01	LEO N. HAAS	684 238 63

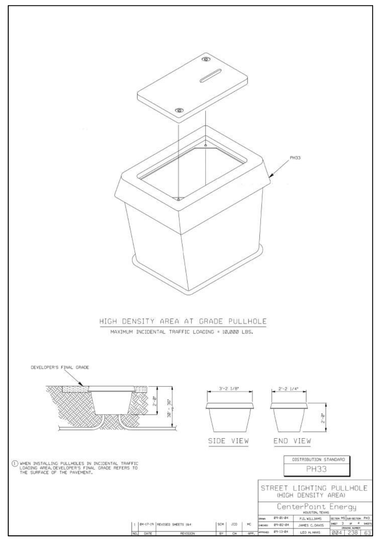

1. WHEN INSTALLING PULLHOLES IN INCIDENTAL TRAFFIC LOADING AREA,DEVELOPER'S FINAL GRADE REFERS TO THE SURFACE OF THE PAVEMENT.

1	04-17-15	UPDATED TO DGN LAYOUT	SCH	JCG	MC
NO.	DATE	REVISION	BY	CK	APP

DISTRIBUTION STANDARD
PH3XX

STREET LIGHTING PULLHOLES

CenterPoint Energy
HOUSTON, TEXAS

DRAWN	08-03-04	P.G. WILLIAMS	SIGNAL TECHNICIAN PH3
DESIGNED	08-03-04	JAMES C. DAVIS	DATE 08-03-04
APPROVED	08-03-04	LEO N. HAAS	684 238 63

PU: PH3XX: STREET LIGHTING PULLHOLE FOR STANDARDS PH3

STREET LIGHT PULLHOLE-LX-XX: STREET LIGHTING PULLHOLE, VARIABLE

PH31: STREET LIGHT, PULL HOLE, GRASSY AREA
PH32: STREET LIGHT, PULL HOLE, INCIDENTAL TRAFFIC AREA
PH33: STREET LIGHT, PULL HOLE, HIGH DENSITY AREA

PH3XX	SU NAME		
	PH31	PH32	PH33
CU NAME	CU QTY		
ACCOUNT - 375			
PH31	1	-	-
PH32	-	1	-
PH33	-	-	1
ACCOUNT - 307			
ANT-POISON	1	1	1

SU NAME	CU NAME	PART #	PART DESCRIPTION	PART QTY
PH31	ANT-POISON	134549	INSECTICIDE, 5% DURSBAN, GRANUL	1
	PH32	107900	PULL HOLE, BLTYP, W 18"L X 12"D, 20K LID	1
PH32	ANT-POISON	134549	INSECTICIDE, 5% DURSBAN, GRANUL	1
	PH33	107946	PULL HOLE, BLA*W 30"L X 4"D, 20K LID	1
PH33	ANT-POISON	134549	INSECTICIDE, 5% DURSBAN, GRANUL	1

DISTRIBUTION STANDARD
PH3XX

STREET LIGHTING PULLHOLES

CenterPoint Energy
HOUSTON, TEXAS

DRAWN	08-03-04	P.G. WILLIAMS	SIGNAL TECHNICIAN PH3
DESIGNED	08-03-04	JAMES C. DAVIS	DATE 08-03-04
APPROVED	08-03-04	LEO N. HAAS	684 238 63

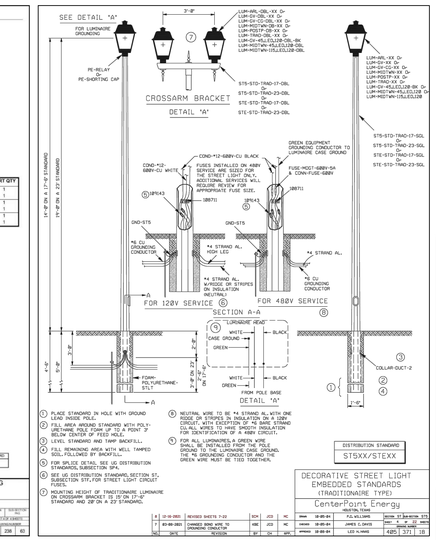

1. PLACE STANDARD IN HOLE WITH GROUND FLAT UNDER MOUNTING SURFACE.
2. FILL ANNULAR SPACE WITH POLY-URETHANE FOAM UP TO A POINT 3" BELOW CENTER OF FEED HOLE.
3. LEVEL, STANDARD AND TAMP BACKFILL.
4. FILL REMAINING AREA WITH WELL TAMPED SOIL, FOLLOWED BY BACKFILL.
5. FOR SPLICE DETAIL SEE UG DISTRIBUTION STANDARDS, SUBSECTION 5PA.
6. SEE UG DISTRIBUTION STANDARD, SECTION 57, SUBSECTION 57E,FOR STREET LIGHT CIRCUIT FUSES.
7. MOUNTING HEIGHT OF TRADITIONAIRE LUMINAIRE ON CROSSARM BRACKET IS 15' ON 17'-0" STANDARD AND 20' ON A 23' STANDARD.
8. NEUTRAL WIRE TO BE *4 STRAND AL WITH ONE RIDGE OR STRIPES IN INSULATION ON A 120V SERVICE, TO BE USED AS THE NEUTRAL. ALL WIRES TO HAVE SMOOTH INSULATION FOR IDENTIFICATION OF A 480V CIRCUIT.
9. FOR ALL LUMINAIRES, A GREEN WIRE SHALL BE INSTALLED FROM THE POLE GROUND TERMINAL TO LUMINAIRE GROUND. THE #6 GROUNDING CONDUCTOR AND THE GREEN WIRE MUST BE TIED TOGETHER.

DISTRIBUTION STANDARD
ST5XX/ST6XX

DECORATIVE STREET LIGHT EMBEDDED STANDARDS
(TRADITIONAIRE TYPE)

CenterPoint Energy
HOUSTON, TEXAS

A	12-18-2003	REVISED SHEETS 7-22	SCH	JCG	MC
F	03-09-2005	CHANGED BKND APR. TO STANDARD APPROVED	DSE	JCG	MC

DRAWN	12-05-03	P.G. WILLIAMS	SIGNAL TECHNICIAN ST5
DESIGNED	12-05-03	JAMES C. DAVIS	DATE 12-05-03
APPROVED	12-05-03	LEO N. HAAS	425 371 18

811
Know what's below.
Call before you dig.

NOTICE:
FOR YOUR SAFETY, YOU ARE REQUIRED BY TEXAS LAW TO CALL 811 AT LEAST 48 HOURS BEFORE YOU DIG SO THAT UNDERGROUND LINES CAN BE MARKED. THIS SIGNATURE DOES NOT FULFULL YOUR OBLIGATION TO CALL 811.

VERIFICATION OF PRIVATE UTILITY LINES

DATE

CENTERPOINT ENERGY NATURAL GAS UTILITIES SHOWN. (GAS SERVICE LINES ARE NOT SHOWN). THIS SIGNATURE NOT TO BE USED FOR CONFLICT VERIFICATION.

SIGNATURE VALID FOR SIX MONTHS.

DATE

CENTERPOINT ENERGY/UNDERGROUND ELECTRICAL FACILITIES VERIFICATION ONLY. (THIS SIGNATURE VERIFIES EXISTING UNDERGROUND FACILITIES - NOT TO BE USED FOR CONFLICT VERIFICATION.)

SIGNATURE VALID FOR SIX MONTHS.

DATE

APPROVED FOR AT&T TEXAS/SWBT UNDERGROUND CONDUIT FACILITIES ONLY.

SIGNATURE VALID FOR ONE YEAR.

CONTACT CENTERPOINT ENERGY AT 713-207-2222 TO ARRANGE FOR LINES TO BE TURNED OFF OR MOVED.

FOR YOUR SAFETY, YOU ARE REQUIRED BY TEXAS LAW TO CALL 811 AT LEAST 48 HOURS BEFORE YOU DIG SO THAT UNDERGROUND LINES CAN BE MARKED. THE SIGNATURES BELOW DO NOT FULLFILL YOUR OBLIGATION TO CALL 811.

THE SIGNATURES BELOW ARE NOT TO BE USED FOR CONFLICT VERIFICATION.

CITY OF JERSEY VILLAGE FIRE DEPARTMENT DATE

JERSEY VILLAGE PUBLIC WORKS DEPARTMENT DATE

NO.	DATE	REVISION

garza EMC, LLC
7708 Rialto Blvd., Suite 125
Austin, Texas 78735
Tel. (512) 298-3284 Fax (512) 298-2592
TBPE # F-14629

Garza EMC, LLC © Copyright 2024

CITY OF JERSEY VILLAGE
A TEXAS STAR COMMUNITY

03-22-2024

STREET LIGHTING PLAN D

CONGO LANE RECONSTRUCTION, UTILITY & DRAINAGE IMPROVEMENTS

CITY OF JERSEY VILLAGE

DRAWN BY:	DESIGNED BY:	QA / QC:	PROJECT NO.:
CM, RC	BAA, PG	BAA	113756-00002

SHEET
59
OF 67

V:\113756-00002\Civil\00-CAD\113756-00002-STLT 4.dwg modified by rchiaro on Feb 29, 24 11:02 AM

40 0 20 40 80

1" = 40'

Know what's below. Call before you dig. 811

DATE	NO.	REVISION

SHEET 60 OF 67	DRAWN BY: CM, RC	CONGO LANE RECONSTRUCTION, UTILITY & DRAINAGE IMPROVEMENTS	TRAFFIC CONTROL PLAN SENATE AVENUE PHASE 1
	DESIGNED BY: BAA, PG		
	QA / QC: BAA	CITY OF JERSEY VILLAGE	
	PROJECT NO.: 113756-00002		

BILAL A. ALIZAI 92792 LICENSED PROFESSIONAL ENGINEER STATE OF TEXAS
09-22-2024

CITY OF JERSEY VILLAGE

garza EMC
7708 Rialto Blvd., Suite 125
Austin, Texas 78735
Tel. (512) 298-3284 Fax (512) 298-2592
TBPE # F-14629
Garza EMC, LLC © Copyright 2024

V:\113756-00002\Civil\00-CAD\113756-00002-TCP 0.dwg modified by rcharo on Feb 19, 24 11:23 AM

1" = 40'

Know what's below. Call before you dig.

DATE	NO.	REVISION

SHEET 61 OF 67	DRAWN BY: CM, RC DESIGNED BY: BAA, PG QA / QC: BAA PROJECT NO.: 113756-00002	CONGO LANE RECONSTRUCTION, UTILITY & DRAINAGE IMPROVEMENTS CITY OF JERSEY VILLAGE	TRAFFIC CONTROL PLAN SENATE AVENUE PHASE 2

BILAL A. ALIZAI 92792 LICENSED PROFESSIONAL ENGINEER 09-22-2024

CITY OF JERSEY VILLAGE

garza EMC
7708 Rialto Blvd., Suite 125
Austin, Texas 78735
Tel. (512) 298-3284 Fax (512) 298-2592
TBPE # F-14629

Garza EMC, LLC © Copyright 2024

V:\113756-00002\Civil\00-CAD\113756-00002-TCP 0B.dwg modified by rcharo on Feb 19, 24 11:23 AM

LAKEVIEW DRIVE
60' R.O.W.

CONGO LANE
60' R.O.W.

AUSTRALIA STREET
60' R.O.W.

SENATE AVE
70' R.O.W.

MATCHLINE SEE THIS SHEET

MATCHLINE SEE THIS SHEET

DO NOT ENTER SIGN R-5
ROAD CLOSED SIGN R11-2 MOUNTED ON TYPE III BARRICADE WITH TWO MOUNTED TYPE A FLASHERS

FLAGGER

FLAGGER SIGN CW20-7

ONE LANE ROAD SIGN CW20-4

ROAD WORK AHEAD SIGN CW20-1

END ROADWORK SIGN G20-2

JERSEY VILLAGE COUNTRY CLUB ESTATES SECTION II AND ANNEX A OF SECTION I VOL. 197, PG. 23, H.C.M.R.

A PORTION OF JERSEY VILLAGE COUNTRY CLUB ESTATES SECTION 1 VOL. 138, PG. 84, H.C.M.R.

A PORTION OF JERSEY VILLAGE COUNTRY CLUB ESTATES SECTION 1 VOL. 183, PG. 84, H.C.M.R.

CONTRACTOR TO ONLY HAVE TRAFFIC CONTROL IN PLACE ON SENATE AVE WHEN THIS AREA IS UNDER CONSTRUCTION

WORK AREA

CONTRACTOR TO INSTALL TEMPORARY MAILBOXES AT THIS LOCATION, AND SHALL REMOVE & RETURN THEM TO THE CITY ONCE CONSTRUCTION IS FULLY COMPLETED. SEE SITE & PAVING DETAILS SHEET.

CONTRACTOR TO ONLY HAVE TRAFFIC CONTROL IN PLACE ON AUSTRALIA ST WHEN THIS AREA IS UNDER CONSTRUCTION

ROAD CLOSED AHEAD SIGN CW20-3

1" = 40'

811 Know what's below. Call before you dig.

REVISION | NO. | DATE

garza EMC
7708 Rialto Blvd., Suite 125
Austin, Texas 78735
Tel. (512) 298-3284 Fax (512) 298-2592
TBPE # F-14629
Garza EMC, LLC © Copyright 2024

CITY OF JERSEY VILLAGE
A TEXAS STAR COMMUNITY

BILAL A. ALIZAI
92792
LICENSED
PROFESSIONAL
ENGINEER
03-22-2024

TRAFFIC CONTROL PLAN PHASE 1-1

CONGO LANE RECONSTRUCTION, UTILITY & DRAINAGE IMPROVEMENTS

CITY OF JERSEY VILLAGE

DRAWN BY: CM, RC
DESIGNED BY: BAA, PG
QA / QC: BAA
PROJECT NO.: 1137560-00002

SHEET 62 OF 67

V:\1137560-00002\Civil\00-CAD\1137560-00002-TCP 1.dwg modified by rchiaro on Feb 19, 24 11:23 AM

LAKEVIEW DRIVE
60' R.O.W.

CONGO LANE
60' R.O.W.

SENATE AVE
120' R.O.W.

AUSTRALIA STREET
60' R.O.W.

MATCHLINE SEE THIS SHEET

DO NOT ENTER SIGN R-5
ROAD CLOSED SIGN R11-2 MOUNTED ON TYPE III BARRICADE WITH TWO MOUNTED TYPE A FLASHERS

FLAGGER SIGN CW20-7

ONE LANE ROAD SIGN CW20-4

ROAD WORK AHEAD SIGN CW20-1

FLAGGER

END ROADWORK SIGN G20-2

CONTRACTOR TO ONLY HAVE TRAFFIC CONTROL IN PLACE ON SENATE AVE WHEN THIS AREA IS UNDER CONSTRUCTION

ROAD CLOSED AHEAD SIGN CW20-3

WORK AREA

CONTRACTOR TO ONLY HAVE TRAFFIC CONTROL IN PLACE ON AUSTRALIA ST WHEN THIS AREA IS UNDER CONSTRUCTION

JERSEY VILLAGE COUNTRY CLUB ESTATES SECTION II AND ANNEX A OF SECTION I VOL. 197, PG. 23, H.C.M.R.

A PORTION OF JERSEY VILLAGE COUNTRY CLUB ESTATES SECTION 1 VOL. 138, PG. 84, H.C.M.R.

A PORTION OF JERSEY VILLAGE COUNTRY CLUB ESTATES SECTION 1 VOL. 183, PG. 84, H.C.M.R.

TEMPORARY ACCESS DRIVES:

1. CONTRACTOR TO UTILIZE TRAKMAT GROUND COVER MATS (1/2" X 45" X 96") FOR TEMPORARY ACCESS DRIVES TO SERVICE HIGH SCHOOL PARKING LOTS ALONG CONGO LANE.
2. USE CRUSHED CONCRETE MATERIAL BENEATH THE TRAKMAT SURFACE TO SET TEMPORARY GRADE.
3. CRUSHED CONCRETE LAYER MUST EXTEND 12" BEYOND EDGE OF TRAKMATS.
4. FOR RESIDENTIAL ACCESS DRIVES, USE CRUSHED CONCRETE MATERIAL APPROXIMATELY 1.5" SIZE OR LESS FROM SUBGRADE TO FINISHED GRADE AT HOME OWNER'S DRIVEWAY AT THE R.O.W.
5. CRUSHED CONCRETE MUST BE FREE OF REBAR, METAL FRAGMENTS, TOXIC CHEMICALS AND ANY OTHER CONSTRUCTION AND DEMOLITION DEBRIS MATERIALS.

40 0 20 40 80
1" = 40'

Know what's below. Call before you dig.

NO.	REVISION	DATE

garza EMC
7708 Rialto Blvd., Suite 125
Austin, Texas 78735
Tel. (512) 298-3284 Fax (512) 298-2592
TBPE # F-14629

Garza EMC, LLC © Copyright 2024

CITY OF JERSEY VILLAGE
A TEXAS STAR COMMUNITY

STATE OF TEXAS
BILAL A. ALIZAI
92792
LICENSED
PROFESSIONAL ENGINEER
03-22-2024

TRAFFIC CONTROL PLAN PHASE 1-2

CONGO LANE RECONSTRUCTION, UTILITY & DRAINAGE IMPROVEMENTS

CITY OF JERSEY VILLAGE

DRAWN BY:	DESIGNED BY:	QA / QC:	PROJECT NO.:
CM, RC	BAA, PG	BAA	113756-00002

SHEET 63 OF 67

V:\113756-00002\Civil\00-CAD\113756-00002-TCP 1-2.dwg modified by rcharo on Feb 19, 24 11:23 AM

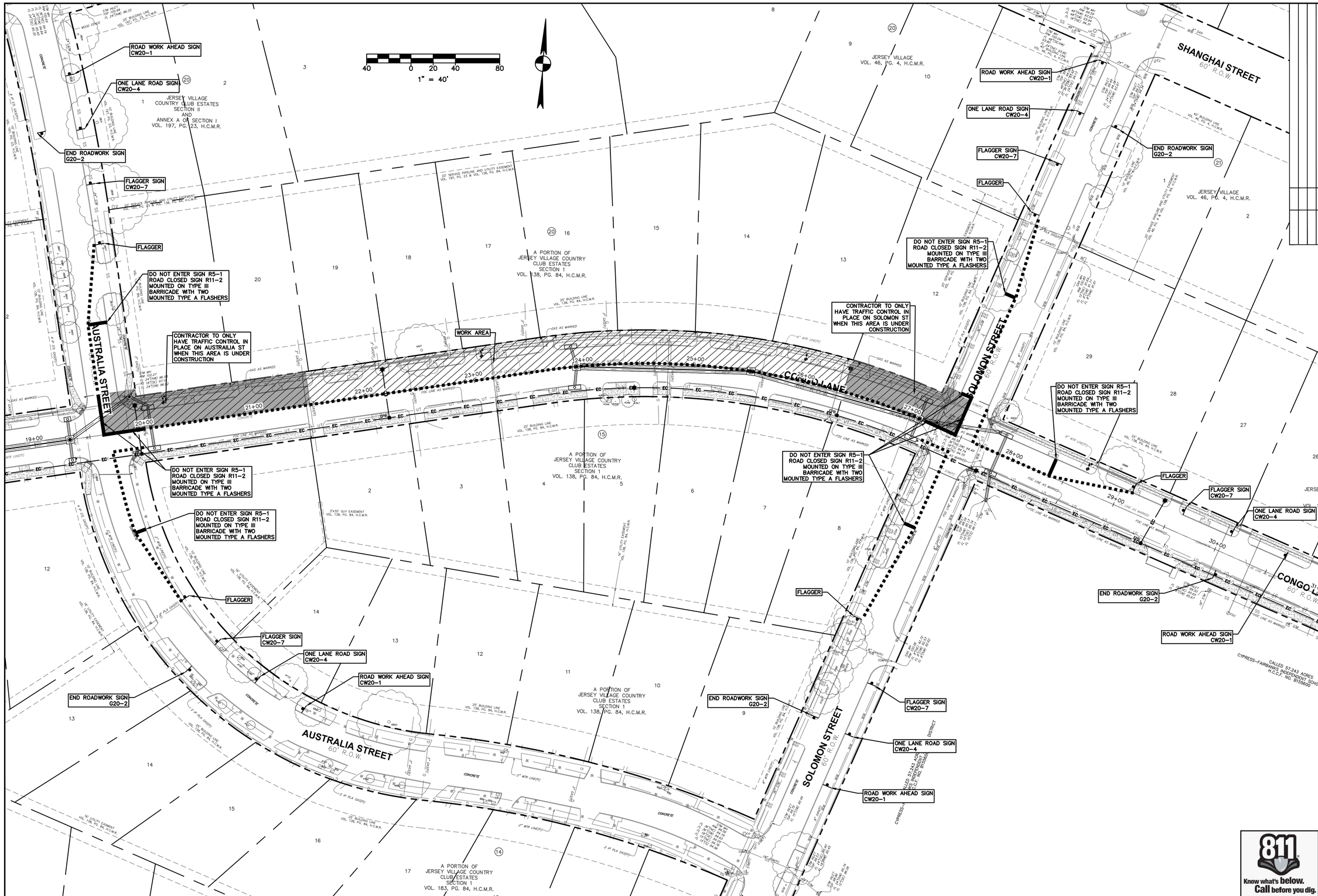

Know what's below. Call before you dig.

garza EMC
7708 Rialto Blvd., Suite 125
Austin, Texas 78735
Tel. (512) 298-3284 Fax (512) 298-2592
TBPE # F-14629
Garza EMC, LLC © Copyright 2024

CITY OF JERSEY VILLAGE
A TEXAS STAR COMMUNITY

STATE OF TEXAS
BILAL A. ALIZAI
92792
LICENSED
PROFESSIONAL ENGINEER
03-22-2024

TRAFFIC CONTROL PLAN PHASE 2-1

CONGO LANE RECONSTRUCTION, UTILITY & DRAINAGE IMPROVEMENTS

CITY OF JERSEY VILLAGE

DRAWN BY:	CM, RC
DESIGNED BY:	BAA, PG
QA / QC:	BAA
PROJECT NO.:	113756-00002

SHEET 64 OF 67

V:\113756-00002\Civil\00-CAD\113756-00002-TCP 2.dwg modified by rcharo on Feb 19, 24 11:23 AM

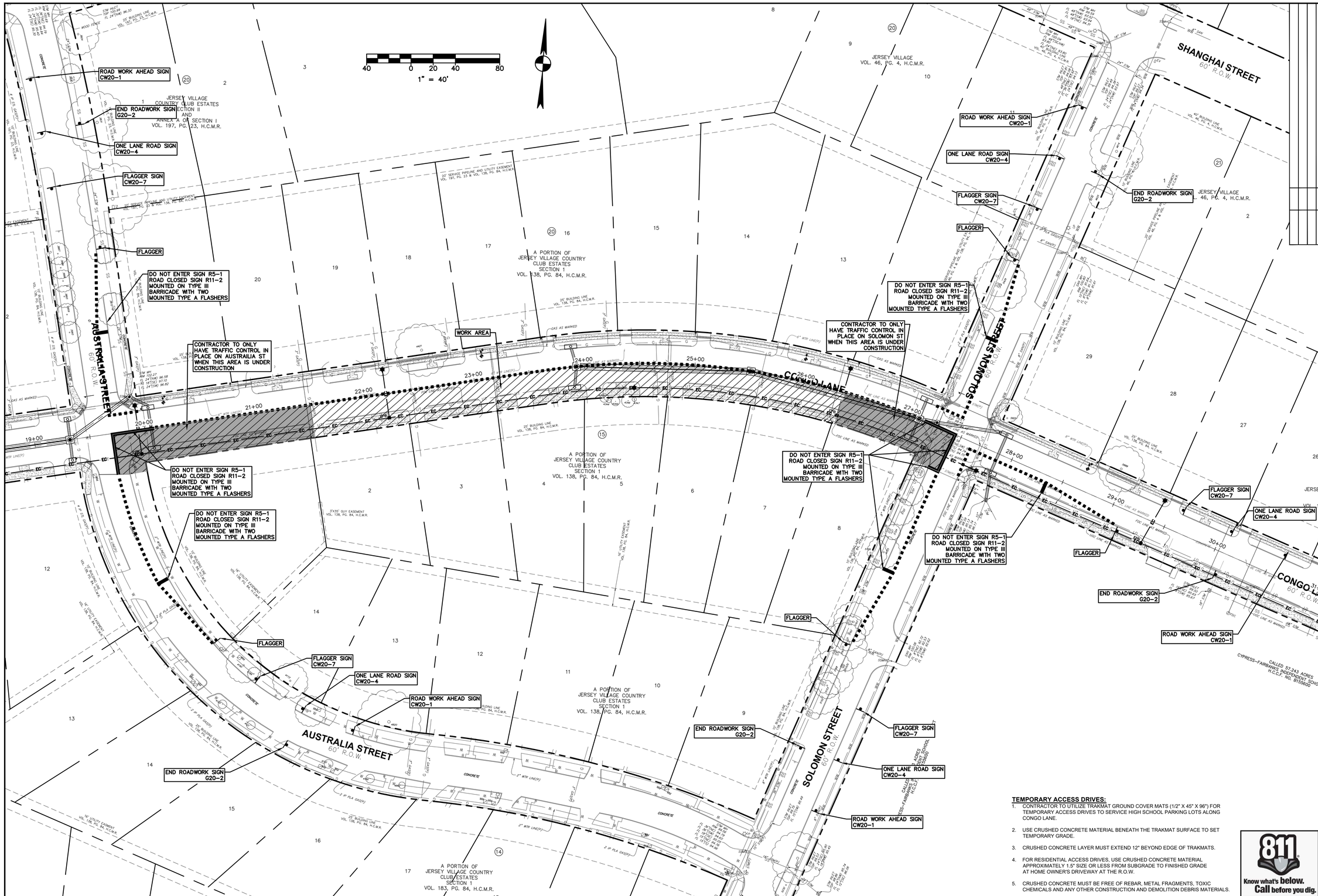

TEMPORARY ACCESS DRIVES:

1. CONTRACTOR TO UTILIZE TRAKMAT GROUND COVER MATS (1/2" X 45" X 96") FOR TEMPORARY ACCESS DRIVES TO SERVICE HIGH SCHOOL PARKING LOTS ALONG CONGO LANE.
2. USE CRUSHED CONCRETE MATERIAL BENEATH THE TRAKMAT SURFACE TO SET TEMPORARY GRADE.
3. CRUSHED CONCRETE LAYER MUST EXTEND 12" BEYOND EDGE OF TRAKMATS.
4. FOR RESIDENTIAL ACCESS DRIVES, USE CRUSHED CONCRETE MATERIAL APPROXIMATELY 1.5" SIZE OR LESS FROM SUBGRADE TO FINISHED GRADE AT HOME OWNER'S DRIVEWAY AT THE R.O.W.
5. CRUSHED CONCRETE MUST BE FREE OF REBAR, METAL FRAGMENTS, TOXIC CHEMICALS AND ANY OTHER CONSTRUCTION AND DEMOLITION DEBRIS MATERIALS.

811 Know what's below. Call before you dig.

REVISION	NO.	DATE

garza EMC
7708 Rialto Blvd., Suite 125
Austin, Texas 78735
Tel. (512) 298-3284 Fax (512) 298-2592
TBPE # F-14629

Garza EMC, LLC © Copyright 2024

CITY OF JERSEY VILLAGE A TEXAS STAR COMMUNITY

STATE OF TEXAS BILAL A. ALIZAI 92792 LICENSED PROFESSIONAL ENGINEER
03-22-2024

TRAFFIC CONTROL PLAN PHASE 2-2

CONGO LANE RECONSTRUCTION, UTILITY & DRAINAGE IMPROVEMENTS

CITY OF JERSEY VILLAGE

DRAWN BY: CM, RC
DESIGNED BY: BAA, PG
QA / QC: BAA
PROJECT NO.: 113756-00002

SHEET 65 OF 67

V:\113756-00002\Civil\00-CAD\113756-00002-TCP 2-2.dwg modified by rcharo on Feb 19, 24 11:23 AM

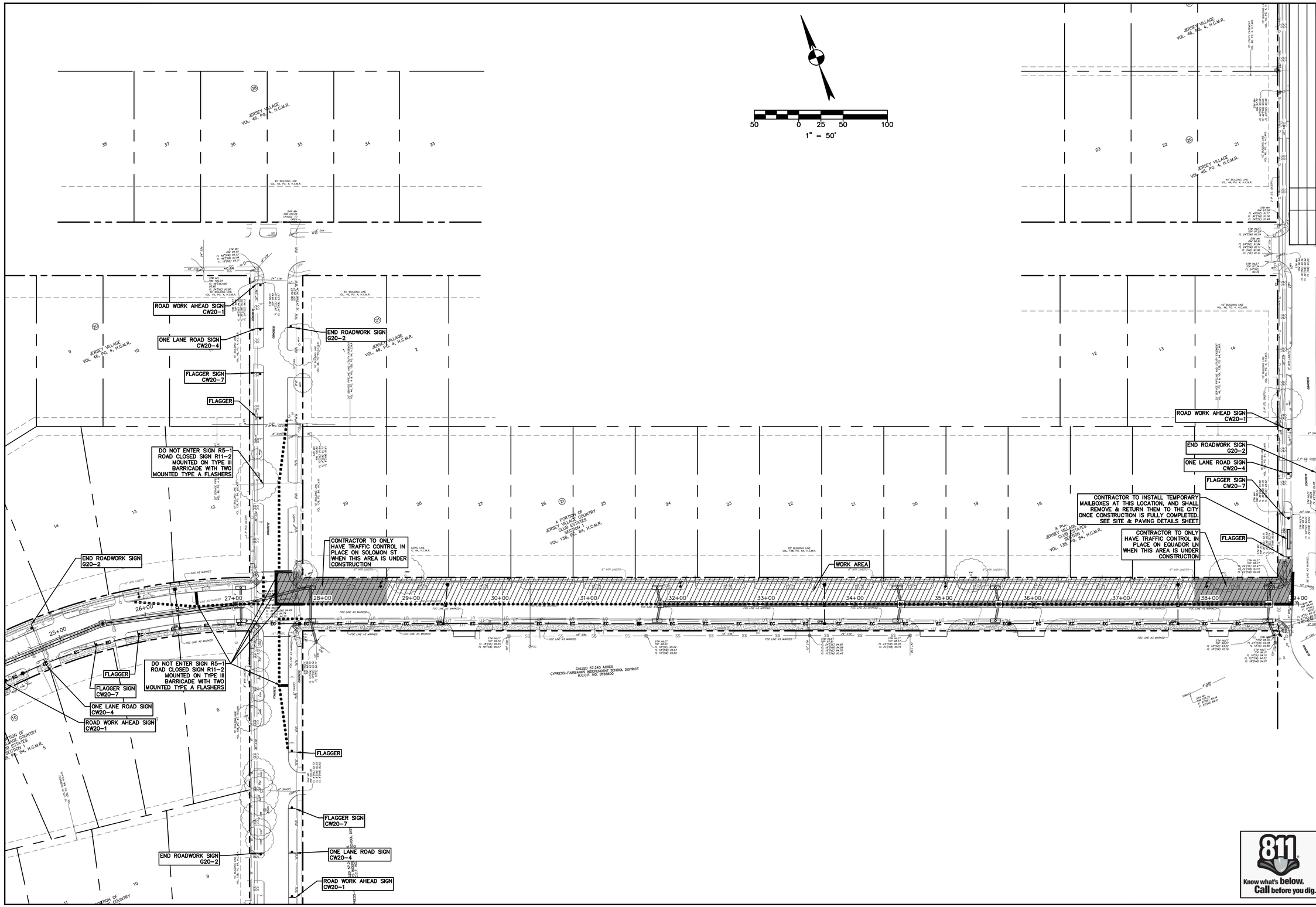

REVISION	NO.	DATE

garza EMC
7708 Rialto Blvd., Suite 125
Austin, Texas 78735
Tel. (512) 298-3284 Fax (512) 298-2592
TBPE # F-14629
Garza EMC, LLC © Copyright 2024

CITY OF JERSEY VILLAGE
A TEXAS STAR COMMUNITY

STATE OF TEXAS
BILAL A. ALIZAI
92792
LICENSED
PROFESSIONAL ENGINEER
03-22-2024

TRAFFIC CONTROL PLAN PHASE 3-1

CONGO LANE RECONSTRUCTION, UTILITY & DRAINAGE IMPROVEMENTS

CITY OF JERSEY VILLAGE

DRAWN BY: CM, RC
DESIGNED BY: BAA, PG
QA / QC: BAA
PROJECT NO.: 113756-00002

811 Know what's below. Call before you dig.

SHEET 66 OF 67

V:\113756-00002\Civil\00-CAD\113756-00002-TCP 3.dwg modified by rcharo on Feb 19, 24 11:23 AM

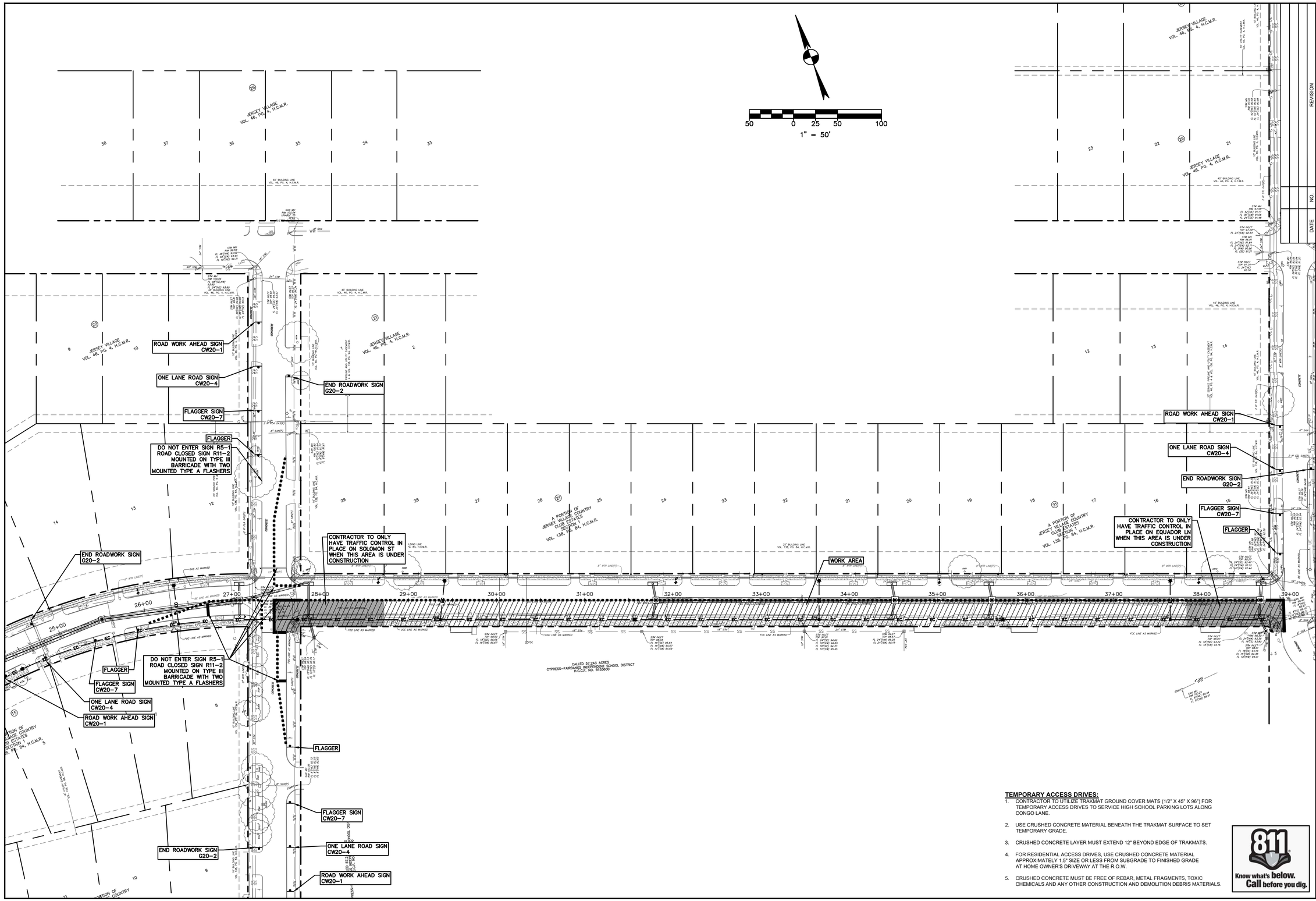

TEMPORARY ACCESS DRIVES:

1. CONTRACTOR TO UTILIZE TRAKMAT GROUND COVER MATS (1/2" X 45" X 96") FOR TEMPORARY ACCESS DRIVES TO SERVICE HIGH SCHOOL PARKING LOTS ALONG CONGO LANE.
2. USE CRUSHED CONCRETE MATERIAL BENEATH THE TRAKMAT SURFACE TO SET TEMPORARY GRADE.
3. CRUSHED CONCRETE LAYER MUST EXTEND 12" BEYOND EDGE OF TRAKMATS.
4. FOR RESIDENTIAL ACCESS DRIVES, USE CRUSHED CONCRETE MATERIAL APPROXIMATELY 1.5" SIZE OR LESS FROM SUBGRADE TO FINISHED GRADE AT HOME OWNER'S DRIVEWAY AT THE R.O.W.
5. CRUSHED CONCRETE MUST BE FREE OF REBAR, METAL FRAGMENTS, TOXIC CHEMICALS AND ANY OTHER CONSTRUCTION AND DEMOLITION DEBRIS MATERIALS.

811 Know what's below. Call before you dig.

REVISION | NO. | DATE

garza EMC, LLC
7708 Rialto Blvd., Suite 125
Austin, Texas 78735
Tel. (512) 298-3284 Fax (512) 298-2592
TBPE # F-14629
Garza EMC, LLC © Copyright 2024

CITY OF JERSEY VILLAGE, A TEXAS STAR COMMUNITY

STATE OF TEXAS
BILAL A. ALIZAI
92792
LICENSED
PROFESSIONAL ENGINEER
03-22-2024

TRAFFIC CONTROL PLAN PHASE 3-2

CONGO LANE RECONSTRUCTION, UTILITY & DRAINAGE IMPROVEMENTS

CITY OF JERSEY VILLAGE

DRAWN BY:	CM, RC	DESIGNED BY:	BAA, PG	QA / QC:	BAA	PROJECT NO.:	113756-00002

SHEET 67 OF 67

V:\113756-00002\Civil\00-CAD\113756-00002-TCP 3-2.dwg modified by rcharo on Feb 19, 24 11:24 AM